Woodburning and Multi-fuel Stove Collection

STOVAX

From our hands to your home...

A Stovax stove is the sum of over four decades of British design and engineering. Crafted to not only provide a deep, warming heat for your home, each brings with it both character and individuality. Whether you opt for one of our traditional or contemporary variations, our obsessive attention to detail ensures our stoves are as refined on the outside as they are innovative on the inside.

MULTI AWARD WINNER

We are proud to have been recognised as an award-winning manufacturer, for our high-quality products and innovative technology.

Find out more at stovax.com/awards

Futura 8 Woodburning Stove Long Leg Model, ***see pages 14 - 19***

The Stovax **Stove Collection**

Futura Range

Sizes in this range (see pages 14 to 19)

- Futura **4**
- Futura **5**
- Futura **8**
- Futura **5 Highline**
- Futura **8 Highline**

Multiple styling choices available

See page 19

Shown Above: Futura 5 Woodburning Stove

Stockton Range

Sizes in this range (see pages 20 to 27)

- Stockton **3**
- Stockton **4**
- Stockton **5**
- Stockton **5 Wide**
- Stockton **8**
- Stockton **11**

Available as single and double door models

See page 25

Shown Above: Stockton 5 Woodburning Stove

Huntingdon Range

Sizes in this range (see pages 28 to 33)

- Huntingdon **20**
- Huntingdon **30**
- Huntingdon **40**

Tracery and Clear Door options available

See page 32

Shown Above: Huntingdon 30 Woodburning Stove, Clear Door

County Range

Sizes in this range (see pages 34 to 39)

- County **3**
- County **5**
- County **5 Wide**
- County **8**

Shown Above: County 5 Multi-Fuel Stove, Burning Logs

Chesterfield Range

Sizes in this range (see pages 40 to 45)

- Chesterfield **5**
- Chesterfield **5 Wide**

Shown Above: Chesterfield 5 Woodburning Stove

Sheraton Range

Sizes in this range (see pages 46 to 51)

- Sheraton **5**
- Sheraton **5 Wide**

Shown Above: Sheraton 5 Woodburning Stove

Vogue Range

Sizes in this range (see pages 52 to 59)

- Vogue **Small**
- Vogue **Small T**
- Vogue **Midi**
- Vogue **Midi T**
- Vogue **Medium**
- Vogue **Medium Slimline**

Multiple mounting options available

See page 57

Shown Above: Vogue Midi Multi-Fuel Stove, burning logs

Riva2 Range

Sizes in this range (see pages 60 to 67)

- Riva2 **40 Freestanding**
- Riva2 **50 Freestanding**
- Riva2 **55 Freestanding**
- Riva2 **66 Freestanding**

Multiple mounting options available

See page 65

Shown Above: Riva2 50 Freestanding Woodburning Stove

Stockton 5 Woodburning Stove, ***see pages 20 - 27***

Forged to Last

Our woodburning and multi-fuel stoves are innovatively designed, solidly built and meticulously tested to ensure they continue to heat your home for many years to come.

SEE WHERE WE MAKE OUR STOVES:
stovax.com/aboutus

Innovation in Design

With creativity and innovation at the heart of what we do, our expert design team continues to create unique, industry leading stoves that both inspire and endure.

From the moment the first concept is sketched by hand, through to the mapping of airflow in the combustion chamber using cutting-edge software, stove design is a science we have been perfecting since 1981.

We continually invest in our research and development facilities to ensure our team is at the forefront of fire design. Our pioneering concepts and technologies make our woodburning and multi-fuel models some of the most sought after stoves available.

Quality Construction

Built with the finest quality materials, each stove is engineered here in the UK. Doors shut reassuringly to form an airtight seal, and air controls slide home both easily and responsively – year after year.

Cast iron and heavy gauge steel are used across our ranges to ensure each stove is built to the highest tolerances.

Possessing excellent thermal qualities, cast iron allows for the casting of intricate designs, making it perfect for traditional stoves. Heavy gauge steel is also an outstanding choice for stove construction, offering greater scope for design thanks to its versatile nature.

Rigorously Tested

In our pioneering laboratories, each stove is put through a series of demanding tests to make sure it performs not only reliably but exceptionally.

Here our development engineers continually refine our products to exceed the toughest UK and European standards, ensuring they are some of the cleanest burning and safest stoves available.

The Stovax Heating Group itself is also subject to stringent tests and we are proud to be an ISO9001 and ISO 14001 accredited company, recognised for our continued commitment to technical innovation, high quality products and excellent customer and after-sales care.

Designed for our **Environment**

When you choose to heat your home with a Stovax stove, you are choosing an environmentally designed product. Our high efficiency Ecodesign technology is engineered to generate the maximum amount of heat from your fuel, with minimal permitted emissions.

Visit **stovax.com/ecodesign** for further information.

eco ECODESIGN PLUS

HIGH EFFICIENCY

Ecodesign Plus

Whilst all our stoves feature Cleanburn technology for high efficiency heating in Smoke Control Areas, they also meet, and in many cases even exceed, Ecodesign emission and efficiency standards. Our Ecodesign products represent the cutting-edge of low emission stoves, reducing particulates by up to 84% in comparison with old appliances.

Ecodesign aims to improve air quality. Stove manufacturers are only able to sell Ecodesign compliant appliances. Our Ecodesign stoves and those of our distributed brands have been verified as meeting the stringent air quality and efficiency standards of Ecodesign regulations, and can be found displaying our Ecodesign Plus label. This helps you to easily see which products meet these standards for low emissions.

We believe this is the future of solid fuel heating, which is why the Stovax Heating Group is proud to offer the largest range of Ecodesign wood and multi-fuel stoves and fires in the UK and Ireland.

Natural Heat

Unlike fossil fuels, wood releases approximately the same amount of carbon into the atmosphere as that absorbed during the growth of a tree, making it a virtually carbon neutral fuel when sourced sustainably.

Choosing one of our high efficiency low emission stoves is a great step towards burning responsibly. To ensure your stove provides optimum heating performance, only wood with a low moisture content should be burnt. Seasoned logs should be allowed to dry for at least two years or more to achieve a moisture content between 14-20%, which can be easily checked with a moisture meter. Alternatively, when purchasing seasoned or kiln dried wood, look for Woodsure 'Ready to Burn' certification.

Good quality dry wood will not only provide a high heat output than that of freshly felled timber, it will also avoid a build-up of tar in your flue and ensure low smoke emissions with clean and crisp flame visuals.

High Efficiency

All Stovax stoves have been designed to burn with high thermal efficiency, minimising the loss of heat energy during combustion. Every model in this brochure is subject to UK energy labelling standards and almost all are rated as either A or A+ energy class appliances. Energy class and efficiency information is listed on each stove's product page for easy reference.

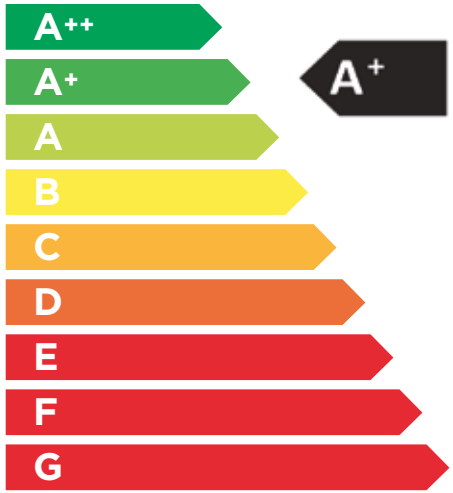

Urban Area Approved

Most town and city homes are located in Smoke Control Areas. To burn logs in these locations, the stove installed must be granted exemption from these restrictions by the government through DEFRA.

This exemption is given only to appliances which have been independently tested to demonstrate particularly clean burning combustion.

All stoves in this brochure are DEFRA exempt for use in Smoke Control Areas (when used in accordance with the product operating where specified) and this is shown on each product page. Your Stovax retailer can give you further help and advice.

WIN THE COST OF YOUR PRODUCT BACK!*

by registering your product online for your free extended warranty. **See page 85 for details.**

Sheraton 5 Wide Multi-fuel Stove burning logs, shown with Claremont Limestone Mantel, ***see pages 46 - 51***

Complete **Peace of Mind**

Expert Retailer Network

We take great care to ensure that our stoves are designed, tested and manufactured to the highest possible quality and safety standards. It is just as important to us that they are sold and installed correctly, so that you get years of enjoyment from your purchase.

Accordingly, you will find our products are only available from experienced, independent retailers who will be happy to show you a selection of models locally in their showrooms, often burning.

These independent retailers will help you with your individual requirements, both technical (such as sizing the heat output to your room and advising on your flue type) and design, to ensure that you select the right stove for your home. They will also be able to advise on or help with the installation of your stove, as well as help provide any after-sales support and servicing your appliance may require in the future.

Whilst we encourage our retailers to promote fireplace products and their outlets via the internet, we do not believe suitable levels of customer care and satisfaction can be obtained from purchasing the product only online and we would strongly recommend that you consider this when undertaking your research and making a purchasing decision. Furthermore, please be aware that we do not offer technical support (beyond our statutory responsibilities) to products bought via nationwide online sales, where this support would normally be offered by one of our qualified, independent retailers.

You can find your nearest retailer by visiting: stovax.com/retailers

Ten Year Extended Warranty

When you purchase a Stovax stove from our Expert Retailer Network your retailer will provide you with a Two Year Warranty for your new solid fuel stove, This can then be extended to a Ten Year Warranty provided your stove is registered with Stovax. See page 88 for further details. Full warranty terms & conditions are available to view at **stovax.com**

Reviewed by Industry Experts

Watch insightful reviews by independent industry expert, The Tortoise. Discover more by visiting: **stovax.com/tortoisereviews**

Huntingdon 30 Woodburning Stove, with Tracery Door, shown with ceramic wood effect beam, ***see pages 28 - 33***

Engineered for **High Performance**

Over 40 Years of British Design and Engineering

Stovax woodburning and multi-fuel stove ranges include a wide range of different styles and sizes to suit your home. Each stove collection is designed and engineered here in Great Britain and features cutting-edge combustion systems with easy to use controls. The result is a stove that give you stunning flames and high performance heating.

Wood or Multi-Fuel?

All Stovax stoves are designed for high efficiency woodburning. Stoves that burn only wood have a burn chamber with a flat bed, as wood burns best on a bed of ashes.

Multi-fuel stoves burn logs but also give you the freedom to burn smokeless fuels with high performance. Depending on the model, the stove's robust riddling grate can be opened or closed, allowing ash to be easily riddled into a built-in ash pan below. This allows air to flow under the fire to create the optimum conditions for burning these solid fuels.

View the video

Learn how to burn right at:
stovax.com/howtolight

Model Shown: Futura 5 Highline, see page 14 - 19

Futura 8

Woodburning Stove

The **Futura** Range

WOOD & MULTI-FUEL STOVES

Pairing high-performance heat with unrivalled flame visuals, the Futura collection represents the cutting-edge in solid fuel design. It's time to bring the future of fire to your living space.

Futura 5
Multi-fuel Stove, burning logs, shown as Long Leg Model

Futura
Key Features

- Three Size Options
- Highline Log Store & Longer Leg models
- Woodburning & Multi-fuel models
- Ecodesign Plus (see page 78)
- Cast Iron & Heavy Gauge Steel
- Cleanburn and Airwash Systems
- DEFRA Exempt for Smoke Control Areas
- Integral Heat Shields (see page 82)
- Convector Heat Flow System
- Integrated External Air Connection (room sealed when fitted with external air supply, see page 82)
- Room vent not normally required* (see page 82)
- 12mm hearth compatible (see page 83)
- Matt Black Finish

For additional imagery see pages 3 & 88

SEE IT BURNING AT:
stovax.com/futura

**Applicable to Futura 4 and 5*

Independently Reviewed by Industry Expert, The Tortoise

Discover why Stovax woodburners are the leading choice for designer aesthetics, quality manufacturing and high efficiency heating

stovax.com/tortoisereviews

Futura 4

Woodburning Stove, shown with Chelsea London Front & Claremont Limestone Mantel

Futura 5

Woodburning Stove

> The heat it delivers makes the whole room feel so much more cosy, and watching the flames is mesmerising

Peter, Derby. See the full story and thousands more at ***stovax.com/review***

SEE IT BURNING AT:
stovax.com/futura

Futura Stoves

Range Summary

	Futura **4**	Futura **5**	Futura **5 Highline**	Futura **8**	Futura **8 Highline**
Nominal Heat Output & Range	**4.1kW (3 - 5.5kW)**	**5kW (3.5 - 7.5kW)**	**5kW (3.5 - 7.5kW)**	**8kW (4.5 - 10kW)**	**8kW (4.5 - 10kW)**
Energy Efficiency Class	**A+**	**A+**	**A+**	**A**	**A**
Maximum Efficiency	**80.9%**	**82.7%**	**82.7%**	**76.4%**	**76.4%**
Multi-fuel Model	✓ 715-539*	✓ 715-458*	✓ 715-044	-	-
Woodburning Model	✓ 715-135	✓ 715-010	✓ 715-025	✓ 715-287	✓ 715-103
Woodburning Long Legs Model	-	✓ 715-038	-	✓ 715-141	-
Optional External 80mm Air Pipe	✓ 998-080	✓ 998-080	✓ 998-080	✓ 998-080	✓ 998-080
Cast Iron & Heavy Gauge Steel construction	✓	✓	✓	✓	✓
Integral Heat Shields	✓	✓	✓	✓	✓
Cleanburn & Airwash Systems	✓	✓	✓	✓	✓
Convector Heat Flow System	✓	✓	✓	✓	✓
Integrated External Air Connection†	✓	✓	✓	✓	✓
DEFRA Exempt for Smoke Control Areas	✓	✓	✓	✓	✓
Ecodesign Plus (page 78)	✓	✓	✓	✓	✓
12mm Hearth Compatible (page 83)	✓	✓	✓	-	-
Flue Outlet	5″ Top or Rear	5″ Top or Rear	5″ Top or Rear	5″ Top or Rear	5″ Top or Rear
Maximum Log Length	250mm	330mm	330mm	450mm	450mm

**With external riddling For complete technical information see page 70 onwards †Room sealed when fitted with external air supply*
Nominal heat outputs, efficiencies & efficiency ratings are based on maximum achievable across that size variation. For full efficiency data see page 79

Futura 8 Highline
Woodburning Stove

Futura 4
Multi-fuel stove, shown burning logs

Stockton 5

Woodburning Stove

The **Stockton** Range

WOOD & MULTI-FUEL STOVES

Whether you live in a cosy cottage or need a high output to heat a spacious living room, this timeless collection perfectly balances the rustic charm of a traditional setting and the sleek lines of a contemporary interior, whether large or small, town or country.

Stockton 5 Wide
Multi-fuel Stove, shown as Single Door model burning logs

Stockton
Key Features

- Six Size Options
- Woodburning & Multi-fuel models
- Single door & double door* models
- Ecodesign Plus (see page 78)
- Cast Iron & Heavy Gauge Steel
- Cleanburn and Airwash Systems
- DEFRA Exempt for Smoke Control Areas
- Integral Heat Shields (see page 82)
- Room vent not normally required (see page 82)
- 12mm hearth compatible** (see page 83)
- Matt Black Finish

For additional imagery see pages 6, 11, 86 & 88

SEE IT BURNING AT:
stovax.com/stockton

eco ECODESIGN PLUS | DEFRA EXEMPT FOR SMOKE CONTROL AREAS | CLEANBURN TECHNOLOGY | AIRWASH CLEAR GLASS | 12MM HEARTH SUITABLE

**Available with Stockton 5 Wide, 8 & 11 models*
***Applicable to Stockton 3, 4 , 5 and 5 Wide*

Electric and Gas models available - see page 90

“

Absolutely love my little woodburner. It might be little but it packs a punch with the heat

*Sheryl, Andover. See the full story and thousands more at **stovax.com/review***

Stockton 3

Multi-fuel stove burning logs, Shown with Chelsea London Cast Front in Matt Black and Claremont Limestone Mantel

Stockton 11

Woodburning Stove with Double Doors

Stockton Stoves

Stockton 4

Multi-fuel Stove, shown burning logs, also shown with Ceramic Wood-effect Beam

Stockton 5

Woodburning Stove, shown with Stovax Brompton Mantel in White

Single Door

✓ All Stockton models

Double Door

✓ Stockton 5 Wide, 8 & 11

A stove to suit any space

Each model in the Stockton range melds form with function to suit your unique lifestyle. From the compact proportions of the Stockton 3 to the impressive heat output of the Stockton 11, this stove is designed to suit almost any space. For those seeking a touch of classic elegance, the 5 Wide, 8 and 11 sizes offer options for double doors, broadening your style options and adding a stately presence.

Models shown to left: Stockton 8 Woodburning Stove

Range Summary

	Stockton **3**	Stockton **4**	Stockton **5**	Stockton **5 Wide**	Stockton **8**	Stockton **11**
Nominal Heat Output & Range	**4.8kW (2 - 5kW)**	**5kW (2.5 - 7kW)**	**5kW (2.5 - 7kW)**	**5kW (2.5 - 7kW)**	**8.3kW (4 - 11kW)**	**11kW (7 - 14kW)**
Energy Efficiency Class	A	A	A	A+	A	A
Maximum Efficiency	**78.1%**	**80.2%**	**79.2%**	**80.2%**	**78.4%**	**76.2%**
Multi-fuel Single Door Model	✓ 721-731*	✓ 721-744*	✓ 721-750*	✓ 721-772*	✓ 721-675*	-
Woodburning Single Door Model	-	✓ 721-146	✓ 721-160	-	✓ 721-191	✓ 721-236
Multi-Fuel Double Door Model	-	-	-	✓ 721-789	✓ 721-681*	-
Woodburning Double Door Model	-	-	-	-	✓ 721-202	✓ 721-243
Cast Iron & Heavy Gauge Steel construction	✓	✓	✓	✓	✓	✓
Integral Heat Shields (page 82)	✓	✓	✓	✓	✓	✓
Cleanburn & Airwash Systems	✓	✓	✓	✓	✓	✓
DEFRA Exempt for Smoke Control Areas	✓	✓	✓	✓	✓	✓
Ecodesign Plus (page 78)	✓	✓	✓	✓	✓	✓
12mm Hearth Compatible (page 83)	✓	✓	✓	✓	-	-
Flue Outlet	5″ top or rear	5″ top or rear	5″ top or rear	5″ top or rear	6″ top or rear	6″ top or rear
Maximum Log Length	200mm	200mm	330mm	400mm	400mm	500mm
Electric & Gas Models Available (page 90)	✓	-	✓	✓	✓	-

**With external riddling For complete technical information see page 70 onwards*

Nominal heat outputs, efficiencies & efficiency ratings are based on maximum achievable across that size variation. For full efficiency data see page 79.

Independently Reviewed by Industry Expert, The Tortoise

Discover why Stovax woodburners are the leading choice for designer aesthetics, quality manufacturing and high efficiency heating

stovax.com/tortoisereviews

Stockton 8

Woodburning Stove with Double Doors

The **Huntingdon** Range

WOOD & MULTI-FUEL STOVES

Combining classic stove design with cutting-edge, high efficiency combustion systems, the Huntingdon Ecodesign stove range brings warmth and character to your home.

Tasteful detailing decorates each stove's cast iron door, side panels and top plate – testament to the craftsmanship behind each stove.

Huntingdon 30

Woodburning Stove with Tracery Door, shown with Grey Pembroke Wooden Mantel

SEE IT BURNING AT:
stovax.com/huntingdon

Huntingdon 40

Woodburning Stove with Clear Door

Independently Reviewed by Industry Expert, The Tortoise

Discover why Stovax woodburners are the leading choice for designer aesthetics, quality manufacturing and high efficiency heating

stovax.com/tortoisereviews

Huntingdon
Key Features

- Three Size Options
- Tracery or Clear Door Options
- Optional Longer Legs
- Woodburning & Multi-fuel models
- Ecodesign Plus (see page 78)
- Removable Door Handle
- Convector Heat Flow System
- Cast Iron & Heavy Gauge Steel
- Cleanburn and Airwash Systems
- DEFRA Exempt for Smoke Control Areas
- Integral Heat Shields (see page 82)
- Integrated External Air Connection (room sealed when fitted with external air supply)
- Room vent not normally required (see page 82)
- 12mm hearth compatible* (see page 83)
- Matt Black Finish

For additional imagery see pages 12 & 87

SEE IT BURNING AT:
stovax.com/huntingdon

**Applicable to Huntingdon 20 & 30 models*

Electric and Gas models available - see page 90

Huntingdon 20

Multi-fuel Stove with Tracery Door burning logs. Shown with Long Legs & Ceramic Wood-effect Beam.

Choice of Styling Options

Choose from clear or tracery door models to perfectly complement your home's décor. Both styles showcase a beautiful view of the flames, with the tracery design adding a touch of Gothic elegance. For added versatility, a separate long leg option is available—these elegant longer legs elevate the stove by 50mm, creating greater visual impact.

Clear Door

Tracery Door

Standard Legs

Long Legs

Models Shown: Huntingdon 30 Woodburning Stove

SEE IT BURNING AT:
stovax.com/huntingdon

Huntingdon 30

Multi-fuel, Clear Door Stove with Long Legs. Shown burning logs with Claremont Limestone Mantel

Huntingdon Stoves

Range Summary

	Huntingdon **20**	Huntingdon **30**	Huntingdon **40**
Nominal Heat Output & Range	**4.1kW (3.5 - 5kW)**	**5kW (3.5 - 7.5kW)**	**8kW (4.5 - 10kW)**
Energy Efficiency Class	A+	A+	A
Maximum Efficiency	**80.9%**	**82.7%**	**76.4%**
Multi-fuel with Clear Door	✓ 701-420*	✓ 701-473*	-
Multi-fuel with Tracery Door	✓ 701-455*	✓ 701-496*	-
Woodburner with Clear Door	✓ 701-107	✓ 701-068	✓ 701-023
Woodburner with Tracery Door	✓ 701-081	✓ 701-042	✓ 701-004
Optional Longer Legs	✓ 701-092	✓ 701-092	✓ 701-092
Optional External Air Pipe - 80mm	✓ 998-080	✓ 998-080	✓ 998-080
Ecodesign Plus (page 78)	✓	✓	✓
Cast Iron & Heavy Gauge Steel construction	✓	✓	✓
Integrated External Air Connection†	✓	✓	✓
Cleanburn & Airwash Systems	✓	✓	✓
DEFRA Exempt for Smoke Control Areas	✓	✓	✓
12mm Hearth Compatible (page 83)	✓	✓	-
Flue Outlet	5″ Top or Rear	5″ Top or Rear	5″ Top or Rear
Maximum Log Length	250mm	330mm	450mm
Electric & Gas Models Available (page 90)	✓	✓	✓

**With external riddling For complete technical information see page 70 onwards †Room sealed when fitted with external air supply.*
Nominal heat outputs, efficiencies & efficiency ratings are based on maximum achievable across that size variation. For full efficiency data see page 79

County 5 Wide
Fixed Grate Wood & Multi-fuel
Stove burning logs
SEE IT
BURNING AT:
stovax.com/
county

The **County** Range

WOOD & MULTI-FUEL STOVES

Character. Charm. High-performance heat. The Stovax County combines timeless styling with advanced combustion systems, resulting in an Ecodesign stove range that's as easy on the eye as it is practical.

County 3
Multi-fuel Stove, shown burning logs

County
Key Features

- Four Size Options
- Woodburning & Multi-fuel models
- Ecodesign Plus (see page 78)
- Cast Iron & Heavy Gauge Steel
- Cleanburn and Airwash Systems
- DEFRA Exempt for Smoke Control Areas
- Integral Heat Shields
- Room vent not normally required* (see page 82)
- 12mm hearth compatible (see page 83)
- Matt Black Finish

For additional imagery see page 85

SEE IT BURNING AT:
stovax.com/county

eco ECODESIGN PLUS
DEFRA EXEMPT FOR SMOKE CONTROL AREAS
CLEANBURN TECHNOLOGY
AIRWASH CLEAR GLASS
12MM HEARTH SUITABLE

**Applicable to County 3, 5 and 5 Wide*

Independently Reviewed by Industry Expert, The Tortoise

Discover why Stovax woodburners are the leading choice for designer aesthetics, quality manufacturing and high efficiency heating

stovax.com/tortoisereviews

County 5
Woodburning Stove

County 8

Woodburning Stove

SEE IT BURNING AT:
stovax.com/county

County Stoves

Range Summary

	County **3**	County **5**	County **5 Wide**	County **8**
Nominal Heat Output & Range	**4.8kW (2 - 6kW)**	**5kW (2.5 - 7kW)**	**5kW (2.5 - 7kW)**	**8.3kW (4 - 11kW)**
Energy Efficiency Class	A	A	A+	A
Maximum Efficiency	**78.1%**	**79.2%**	**80.2%**	**77.8%**
Multi-fuel Model	✓ 735-437*	✓ 735-479*	✓ 735-521*	-
Woodburning Model	-	✓ 735-039	-	✓ 735-145
Cast Iron & Heavy Gauge Steel construction	✓	✓	✓	✓
Integral Heat Shields (page 82)	✓	✓	✓	✓
Cleanburn & Airwash Systems	✓	✓	✓	✓
DEFRA Exempt for Smoke Control Areas	✓	✓	✓	✓
Ecodesign Plus (page 78)	✓	✓	✓	✓
12mm Hearth Compatible (page 83)	✓	✓	✓	-
Flue Outlet	5″ Top or Rear	5″ Top or Rear	5″ Top or Rear	6″ Top or Rear
Maximum Log Length	200mm	330mm	400mm	450mm

**With external riddling For complete technical information see page 70 onwards*
Nominal heat outputs, efficiencies & efficiency ratings are based on maximum achievable across that size variation. For full efficiency data see page 79

County 3
Multi-fuel Stove, shown burning logs

Chesterfield 5 Wide

Multi-fuel Stove burning logs, shown with Ceramic Wood-effect Beam

SEE IT BURNING AT:
stovax.com/chesterfield

The **Chesterfield** Range

WOOD & MULTI-FUEL STOVES

Delivering exceptional heating performance, the Chesterfield stove range combines reimagined classic styling and modern aesthetics. Tasteful bevelling, sweeping curves, and an elegant Rose Scroll door handle enhance its clean lines, while powerful internal Airwash jets keep the expansive glass panel clear, offering a magnificent view of the flames.

Independently Reviewed by Industry Expert, The Tortoise

Discover why Stovax woodburners are the leading choice for designer aesthetics, quality manufacturing and high efficiency heating

stovax.com/tortoisereviews

Chesterfield 5

Multi-fuel Stove burning logs

Chesterfield
Key Features

- Two Size Options
- Woodburning & Multi-fuel models
- Ecodesign Plus (see page 78)
- Convector Heat Flow System
- Cast Iron & Heavy Gauge Steel
- Cleanburn and Airwash Systems
- DEFRA Exempt for Smoke Control Areas
- Integral Heat Shields
- Optional Longer Legs
- Optional dedicated external air kit (see page 82)
- Room vent not normally required (see page 82)
- 12mm hearth compatible (see page 83)
- Matt Black Finish

SEE IT BURNING AT:
stovax.com/ chesterfield

Electric and Gas models available - see page 90

Chesterfield 5 Wide
Multi-fuel Stove burning logs, with Optional Longer Legs

Chesterfield 5
Woodburning Stove, shown with Grafton Limestone Mantel

Chesterfield Stoves

Range Summary

	Chesterfield **5**	Chesterfield **5 Wide**
Nominal Heat Output & Range	**5kW (2.5 - 7kW)**	**5kW (2.5 - 7kW)**
Energy Efficiency Class	**A+**	**A**
Maximum Efficiency	**79.5%**	**79.4%**
Multi-fuel Model	✓ 705-562*	✓ 705-577*
Woodburning Model	✓ 705-332	-
Optional External Air Kit (page 82)	✓ SH-5AIR	✓ SH-5WIDAIR
Optional Longer Legs (170mm)	✓ 705-807	✓ 705-807
Cast Iron & Heavy Gauge Steel construction	✓	✓
Integral Heat Shields	✓	✓
Convector Heat Flow System (page 83)	✓	✓
Cleanburn & Airwash Systems	✓	✓
DEFRA Exempt for Smoke Control Areas	✓	✓
12mm Hearth Compatible (page 83)	✓	✓
Ecodesign Plus (page 78)	✓	✓
Flue Outlet	5″ top or rear	5″ top or rear
Maximum Log Length	330mm	400mm
Electric & Gas Models Available (page 90)	✓	-

**With external riddling For complete technical information see page 70 onwards*
Nominal heat outputs, efficiencies & efficiency ratings are based on maximum achievable across that size variation.
For full efficiency data see page 79

Chesterfield 5

Woodburning Stove, shown with Optional Longer Legs.

SEE IT BURNING AT: **stovax.com/sheraton**

Sheraton 5

Woodburning Stove

The **Sheraton** Range

WOOD & MULTI-FUEL STOVES

The Sheraton's classic but sophisticated aesthetics are designed to grace period or modern interiors alike. With an expansive stove window that prioritises visuals granting a superb views of the fire, these stoves are perfect for town or country living.

Sheraton 5

Woodburning Stove, shown with Stovax Cavendish Bolection Limestone Mantel

Sheraton
Key Features

- Two Size Options
- Woodburning & Multi-fuel models
- Ecodesign Plus (see page 78)
- Cast Iron & Heavy Gauge Steel
- Cleanburn and Airwash Systems
- Convector Heat Flow System
- DEFRA Exempt for Smoke Control Areas
- Integral Heat Shields (see page 82)
- Room vent not normally required (see page 82)
- 12mm hearth compatible (see page 83)
- Matt Black Finish
- Optional Dedicated External Air Kit (see page 83)

For additional imagery see page 10

SEE IT BURNING AT:
stovax.com/sheraton

eco ECODESIGN PLUS | DEFRA EXEMPT FOR SMOKE CONTROL AREAS | CLEANBURN TECHNOLOGY | AIRWASH CLEAR GLASS | 12MM HEARTH SUITABLE | OPTIONAL EXTERNAL AIR SUPPLY KIT | CONVECTOR HEAT SYSTEM

Electric and Gas models available - see page 90

“

The Sheraton 5 is the perfect mixture of traditional and modern - it has a timeless elegance to it

*Claire, Dunoon. See the full story and thousands more at **stovax.com/review***

Sheraton 5 Wide

Multi-fuel Stove shown burning logs

Sheraton 5

Multi-fuel Stove, shown burning logs

Sheraton Stoves

Range Summary

	Sheraton **5**	Sheraton **5 Wide**
Nominal Heat Output & Range	**5kW (2 - 7kW)**	**5kW (2.5 - 7kW)**
Energy Efficiency Class	A+	A
Maximum Efficiency	**79.5%**	**79.4%**
Multi-fuel Model	✓ SH-5M-E*	✓ SH-5WIDM-E*
Woodburning Model	✓ SH-5W-E	-
Optional External Air Kit (page 82)	✓ SH-5AIR	✓ SH-5WIDAIR
Cast Iron & Heavy Gauge Steel construction	✓	✓
Integral Heat Shields (page 82)	✓	✓
Cleanburn & Airwash Systems	✓	✓
Convector Heat Flow System	✓	✓
DEFRA Exempt for Smoke Control Areas	✓	✓
Ecodesign Plus (page 78)	✓	✓
12mm Hearth Compatible (page 83)	✓	✓
Flue Outlet	5″ top or rear	5″ top or rear
Maximum Log Length	330mm	400mm
Electric & Gas Models Available (page 90)	✓	-

**With external riddling For complete technical information see page 70 onwards*
Nominal heat outputs, efficiencies & efficiency ratings are based on maximum achievable across that size variation.
For full efficiency data see page 79

Sheraton 5 Wide
Multi-fuel Stove, with Victorian Corbel Limestone Mantel, shown burning logs

Vogue Midi

Woodburning Stove with optional Plinth in Claremont Limestone Mantel

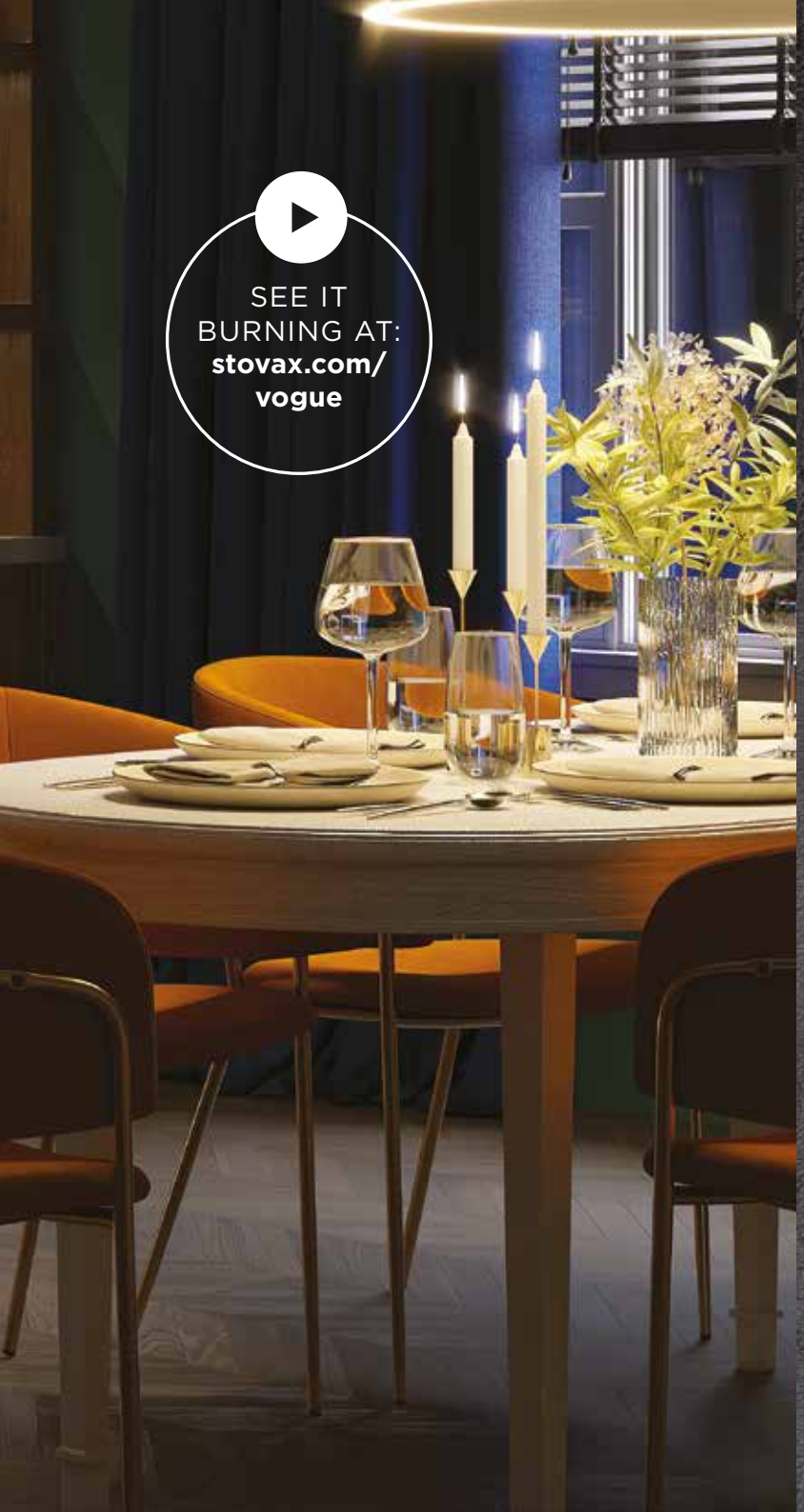

SEE IT BURNING AT:
stovax.com/vogue

The **Vogue** Range

WOOD & MULTI-FUEL STOVES

Presenting a stunning view of the flames, Vogue models feature a signature bevelled cast iron door with an expansive glass viewing window, kept clear by the powerful Airwash system that also aids the range's high levels of combustion efficiency. The Vogue range offers versatile mounting options including plinths, log stores and benches ensuring a perfect fit for any interior design.

“

A thing of pure beauty with a nice big viewing window for fire gazing. Makes a stunning feature piece.

Seth, London. See the full story and thousands more at ***stovax.com/review***

Vogue Medium

Woodburning Stove

Vogue
Key Features

- Six Size Options
- Woodburning & Multi-fuel models
- Ecodesign Plus (see page 78)
- Cast Iron & Heavy Gauge Steel
- Cleanburn and Airwash Systems
- DEFRA Exempt for Smoke Control Areas
- Integral Cast Iron Top Plate
- Optional dedicated external air kit (see page 82)
- Optional Plinth & Wood Store bases
- Room vent not normally required (see page 82)
- Stove bench compatible (see page 84)
- 12mm hearth compatible* (see page 83)
- Matt Black Finish

For additional imagery see page 70 & 77

SEE IT BURNING AT:
stovax.com/vogue

**Applicable to Vogue Small, Small T, Midi and Midi T*

Electric and Gas models available - see page 90

Vogue Small T
Multi-fuel Stove shown with optional Midline Log Store Base burning logs

Vogue Midi

Woodburning Stove with optional Midline Log Store Base

SEE IT BURNING AT: **stovax.com/vogue**

Versatile styling options to suit your space

Offering a superb view of the flames, the versatile styling of the Vogue fits perfectly into contemporary and traditional interiors alike. With a range of mounting options available, such as a the Midline or Highline* Log Stores, Stove Bench, or with or without a Plinth, it can be tailored to suit various needs and styles. Alternatively, the Midi T models can also be wall mounted for a completely different, modern aesthetic.

*† When storing logs under stove benches Stovax advise this should be offset to one side and not directly beneath the stove's position. If placing beneath the stove there should be a minimum 50mm air gap above logs. * Available exclusively with Vogue Medium*

Vogue Medium

Woodburning Stove with optional Highline Log Store Base

Range Summary

	Vogue **Small**	Vogue **Small T**	Vogue **Midi**	Vogue **Midi T**	Vogue **Medium**	Vogue **Medium Slimline**
Nominal Heat Output & Range	**5kW (2 - 7kW)**	**4.8kW (3.5 - 7.5kW)**	**5kW (2.5 - 7kW)**	**5kW (2.5 - 7kW)**	**7.8kW (5 - 11kW)**	**5kW (2.5 - 7kW)**
Energy Efficiency Class	A+	A	A+	A	A	A
Maximum Efficiency	**80.7%**	**80.2%**	**79.5%**	**79.8%**	**80.8%**	**79.4%**
Multi-fuel	-	✓ VG-SMTMU-E*	✓ VG-MIDMU-E*	✓ VG-MIDTMU-E*	✓ VG-MEDMU-E*	✓ VG-MEDSLMU-E*
Woodburner	✓ VG-SMWU-E	✓ VG-SMTWU-E	✓ VG-MIDWU-E	✓ VG-MIDTWU-E	✓ VG-MEDWU-E	-
Plinth Base	✓ VG-SM-BP	✓ VG-SM-BP	✓ VG-MID-BP	✓ VG-MID-BP	✓ VG-MED-BP	✓ VG-MEDSL-BP
Midline Base	✓ VG-SM-BML-E	✓ VG-SM-BML-E	✓ VG-MID-BML-E	✓ VG-MID-BML-E	✓ VG-MED-BML	✓ VG-MEDSL-BML
Highline Base	-	-	-	-	✓ 733-897	-
Optional External Air Kit (page 82)	✓ SMAIR-E	✓ SMAIR-E	✓ MIDAIR-E	✓ MIDAIR-E	✓ MEDAIR-E	✓ MEDSLAIR-E
Heat Shield	✓ VG-SMHSK-E	✓ VG-SMTHSKE-E	✓ VG-MIDHSK-E	✓ VG-MIDTHSK-E	✓ VG-MEDHSK-E	✓ VG-MEDHSK-E
Wood Kit	-	✓ WDKITSM	-	-	-	-
Wall Mounting Bracket	-	-	-	✓ MIDWM	-	-
Ecodesign Plus (page 78)	✓	✓	✓	✓	✓	✓
Cast Iron & Heavy Gauge Steel construction	✓	✓	✓	✓	✓	✓
Stove Bench Compatible (page 84)	✓	✓	✓	✓	✓	✓
Cleanburn & Airwash Systems	✓	✓	✓	✓	✓	✓
DEFRA Exempt for Smoke Control Areas	✓	✓	✓	✓	✓	✓
12mm Hearth Compatible (page 83)	✓	✓	✓	✓	✓	✓
Flue Outlet	5″ Top or Rear	5″ Top or Rear	5″ Top or Rear	5″ Top or Rear	6″ Top or Rear	5″ Top or Rear
Maximum Log Length	280mm	280mm	330mm	330mm	430mm	400mm
Electric & Gas Models Available (page 90)	✓	-	✓	✓	-	-

**With external riddling* *For complete technical information see page 70 onwards* *Nominal heat outputs, efficiencies & efficiency ratings are based on maximum achievable across that size variation. For full efficiency data see page 79*

SEE IT BURNING AT: **stovax.com/ riva2**

Riva2 66 Freestanding

Woodburning Stove, with removable handle in situ

The **Riva2** Range

WOOD & MULTI-FUEL STOVES

Blending graceful curves with a striking thermal lining system, the Riva2 Freestanding range brings understated sophistication to any setting. With versatile styling choices such as log boxes or refined feet, and the convenience of Ri-Ignite Boost Mode, it delivers both effortless ignition and elegant flame control.

Independently Reviewed by Industry Expert, The Tortoise

Discover why Stovax woodburners are the leading choice for designer aesthetics, quality manufacturing and high efficiency heating

stovax.com/tortoisereviews

Riva2 40 Freestanding

Multi-Fuel Stove, shown burning logs with removeable handle in situ

Riva2 Freestanding
Key Features

- Four Size Options
- Woodburning models with Riva2 40 capable of burning smokeless fuel
- Ecodesign Plus (see page 78)
- Cast Iron & Heavy Gauge Steel
- Cleanburn and Airwash Systems
- Convector Heat Flow System
- Ri-Ignite Boost mode for effortless ignition
- DEFRA Exempt for Smoke Control Areas
- Integrated External Air Connection (room sealed when fitted with external air supply, see page 82)
- Stylish flexibility with log box or feet options
- Room vent not normally required (see page 82)
- Stove bench compatible (see page 84)
- 12mm hearth compatible* (see page 83)
- Removable handle
- Matt Black Finish

For additional imagery see page 81

SEE IT BURNING AT:
stovax.com/riva2

Riva2 55 Freestanding
Woodburning Stove, shown on optional Log Box

Riva2 50 Freestanding

Woodburning Stove, with removeable handle in situ, shown with Walnut-effect Hardwood feet

SEE IT BURNING AT:
stovax.com/riva2

Riva2 Freestanding Stoves

Tailored styling to complement your living space

Each Riva2 Freestanding fire is compatible with our contemporary steel stove benches (see page 84), providing a sleek, modern alternative to a traditional hearth installation by elevating the stove for a stronger visual presence. Alternatively, log boxes can raise the Riva2, further enhancing its impact while offering a practical solution for wood storage.

All Riva2 Freestanding fires also offer a selection. Cast iron, or walnut-finished wooden feet add a subtle nod to classic stove design and can be combined with the optional log boxes for a coordinated look.

Cast Iron Feet

Walnut-effect Hardwood Feet

Log Box

Log Box & Feet

Stove Benches

See page 84 for more details on stove benches

Riva2 66 Freestanding

Woodburning Stove, shown with Cast Iron Feet

Riva2 50 Freestanding

Woodburning Stove, Shown with removable handle in situ, shown on 120 High Bench

Riva2 55 Freestanding
Woodburning Stove in Claremont Limestone mantel

Riva2 Freestanding Stoves

Range Summary

	Riva2 **40**	Riva2 **50**	Riva2 **55**	Riva2 **66**
Nominal Heat Output & Range	**4.9kW (3.6 - 5.3kW)**	**5kW (3.8 - 6.5kW)**	**5kW (4.3 - 6kW)**	**8.1kW (5.5 - 9kW)**
Energy Efficiency Class	A+	A	A	A
Maximum Efficiency	**80.5%**	**77.4%**	**77.1%**	**76.5%**
Woodburning Model	-	✓ 723-214	✓ 723-221	✓ 723-235
Multi-Fuel Model	✓ 723-206	-	-	-
Optional Log Box	✓ 723-808	✓ 723-816	✓ 723-816	✓ 723-824
Optional Cast Iron Feet	✓ 723-833	✓ 723-833	✓ 723-833	✓ 723-833
Optional Walnut-effect Hardwood Feet	✓ 723-840	✓ 723-840	✓ 723-840	✓ 723-840
Ecodesign Plus (page 78)	✓	✓	✓	✓
Cast Iron & Heavy Gauge Steel construction	✓	✓	✓	✓
Integral Heat Shields (page 82)	✓	✓	✓	✓
Stove Bench Compatible (page 84)	✓	✓	✓	✓
Re-Ignite Boost Mode	✓	✓	✓	✓
Cleanburn & Airwash Systems	✓	✓	✓	✓
DEFRA Exempt for Smoke Control Areas	✓	✓	✓	✓
12mm Hearth Compatible (page 83)	✓	✓	✓	✓
Flue Outlet	5″ top	5″ top	5″ top	5″ top
Maximum Log Length	250mm	350mm	350mm	500mm

eco ECODESIGN PLUS · DEFRA EXEMPT FOR SMOKE CONTROL AREAS · DUALFLOW AIRWASH · CLEANBURN TECHNOLOGY · RI-IGNITE MODE · INTEGRATED EXTERNAL AIR CONNECTION · CONVECTOR HEAT SYSTEM · 12MM HEARTH SUITABLE

For complete technical information see page 70 onwards *Nominal heat outputs, efficiencies & efficiency ratings are based on maximum achievable across that size variation.* *For full efficiency data see page 79*

Riva2 66 Freestanding

Woodburning Stove, with optional Log Box and Walnut-effect Hardwood Feet

Studio 3 Freestanding, Woodburning Fire

Riva2 50 Woodburning Fire, with Profil XS 4-sided frame

Studio Air 2 Woodburning Fire, shown with Profil 4-sided Frame and white decorative trim

Fires at the Forefront of **Contemporary Design**

Alongside the stoves in this brochure, Stovax also offer signature cassette, stove and freestanding Ecodesign fire ranges. Providing the same high efficiency and clean burning combustion, these contemporary models redefine modern fire aesthetics.

These Ecodesign fire ranges represent the pinnacle of fire and stove design, with pure, minimalist styles that create an arresting centrepiece in any setting.

From the sublime Studio Air range, with its expansive landscape flame visuals, to the versatile Riva2 collection, these models can be selected in various sizes and heat outputs to suit your home.

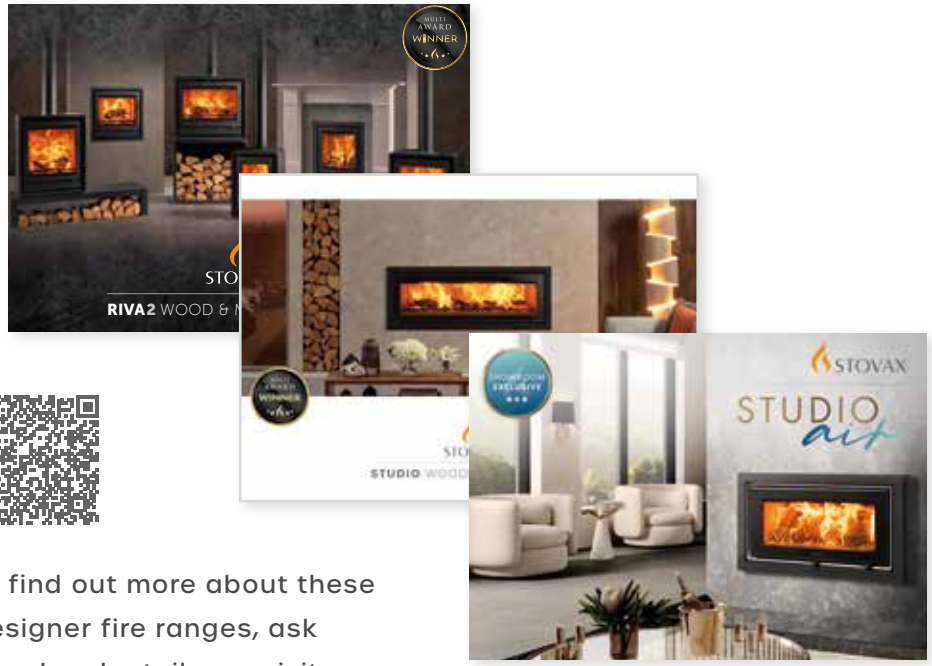

To find out more about these designer fire ranges, ask your local retailer or visit **www.stovax.com.**

Vogue 700 Inset

Fireside allure meets industrial-chic

With landscape proportions, a cast iron door, and signature subtle contours echoed across the build of its exterior, the Vogue 700 Inset is more than just a fire - it's a designer centrepiece.

The Vogue 700 Inset offers an expansive view of vivid flames through its wide viewing window, and burns with high efficiency. A single air control make for easy operation, with a discreet door handle that has been ergonomically engineered for both functions and aesthetics.

Nominal Heat Output & Range	**7kW (4 - 11kW)**
Energy Efficiency Class	**A**
Maximum Efficiency	**77%**
Multi-fuel	-
Woodburner	✓ 323-007
Optional External Air Kit (page 82)	✓ 323-900
Ecodesign Plus (page 78)	✓
Cast Iron & Heavy Gauge Steel construction	✓
Cleanburn & Airwash Systems	✓
DEFRA Exempt for Smoke Control Areas	✓
Flue Outlet	6" Top
Maximum Log Length	400mm

For complete technical information see page 70 onwards
Nominal heat outputs and efficiencies are based on maximum achievable across that size variation.
For full efficiency data see page 79

Vogue 700 Inset Woodburning Fire

Technical Information

An approved competent person of solid fuel installations should undertake a site survey prior to purchase and must install any Stovax stove. Your Stovax retailer will be able to advise on this. The following information is to assist you in your choice of a suitable Stovax stove. It is not intended to be all the information required to install your fire or stove; this can be obtained from your local Stovax retailer or you can view and download the relevant full installation instructions from the Stovax website at **www.stovax.com**.

Vogue Midi T Woodburning Stove, with optional Midline Logstore base, ***see pages 52 - 59***

Futura **4** ..... 14 - 19

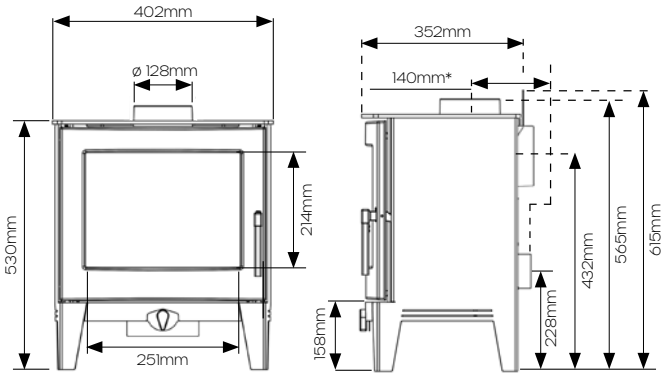

Futura **5** ..... 14 - 19

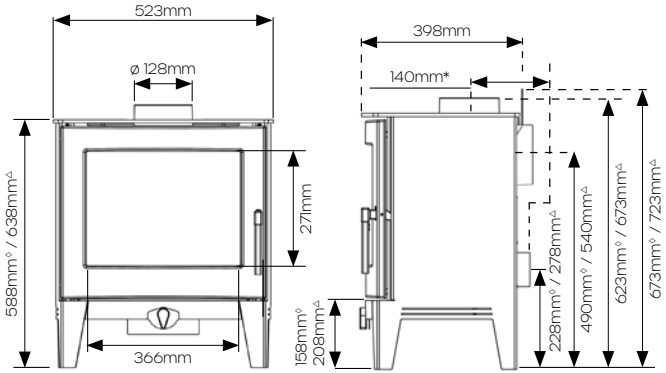

◊ = Standard Model △ = Long Leg Model *From Top Flue Exit

Futura **8** ..... 14 - 19

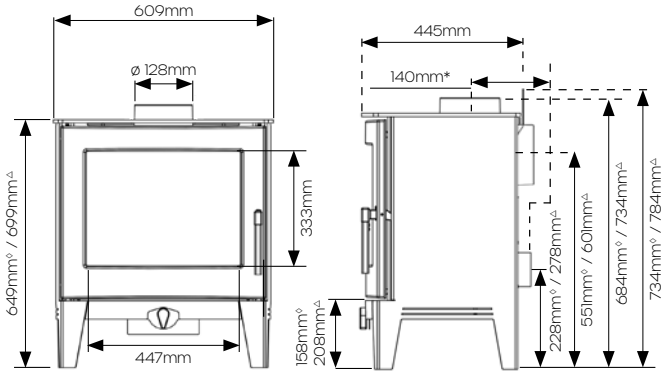

◊ = Standard Model △ = Long Leg Model *From Top Flue Exit

Futura **5 Highline** ..... 14 - 19

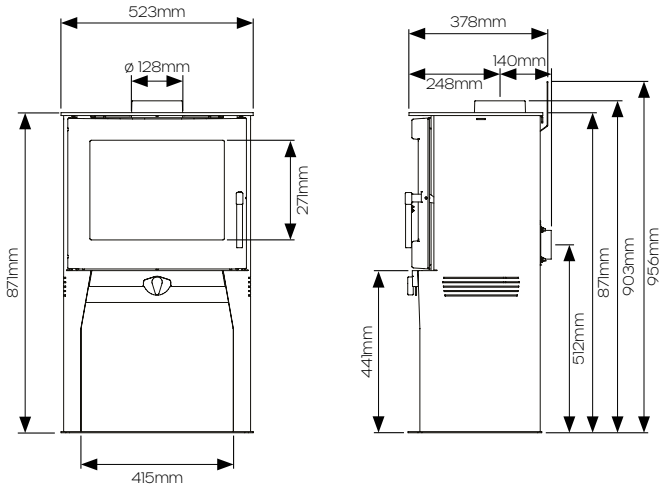

Futura **8 Highline** ..... 14 - 19

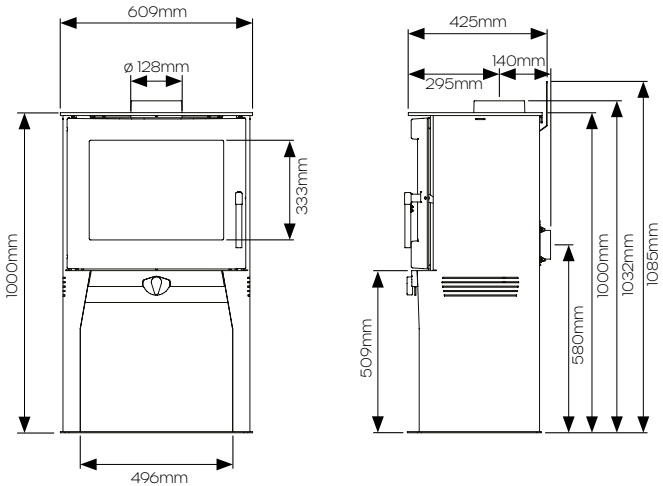

Stockton **3** ..... 20 - 27

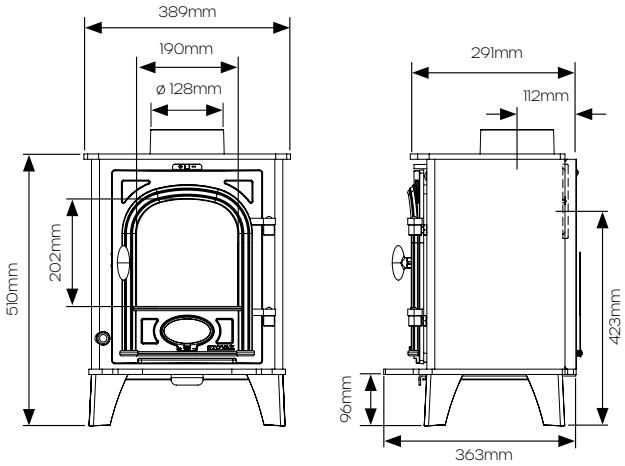

Technical Information

Stockton **4** ..... 20 - 27

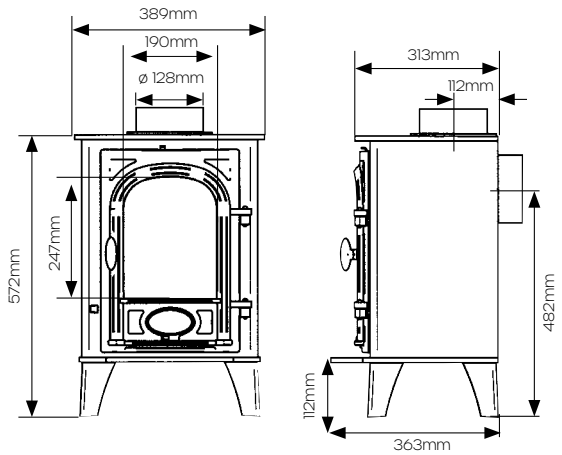

Stockton **5** ..... 20 - 27

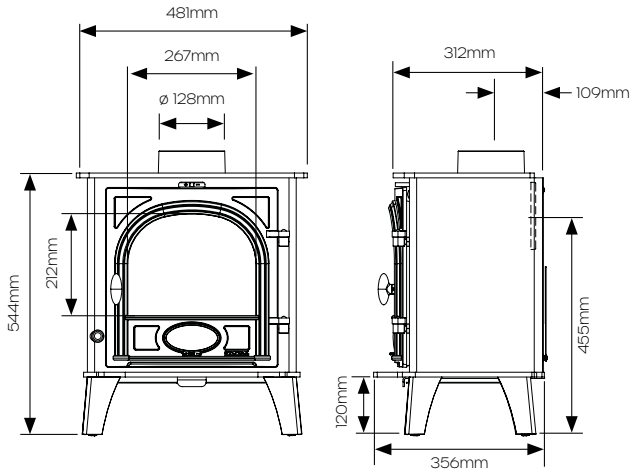

Stockton **5 Wide** 20-27

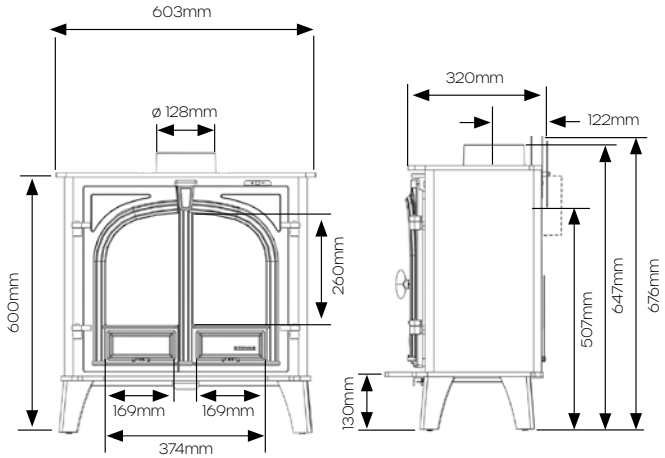

Stockton **8** 20-27

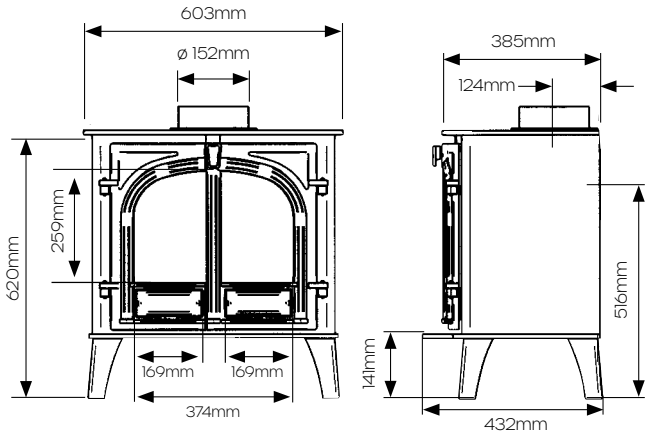

Stockton **11** 20-27

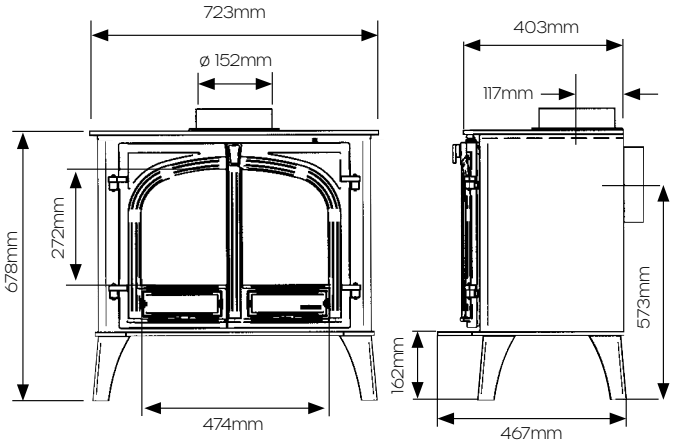

Huntingdon **20** ..... 28 - 33

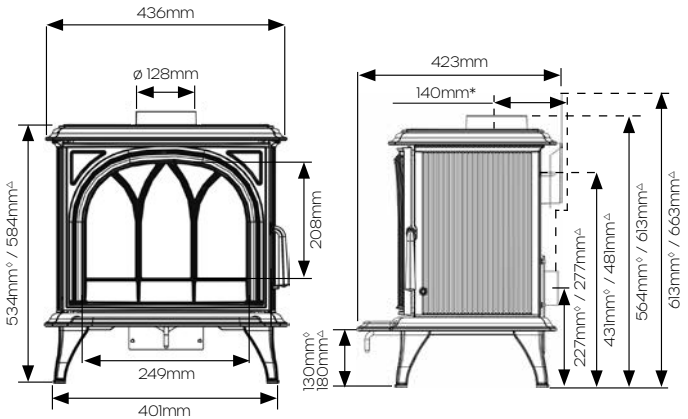

◊ = Standard Model △ = Long Leg Model *From Top Flue Exit

Technical Information

Huntingdon **30** ..... 28 - 33

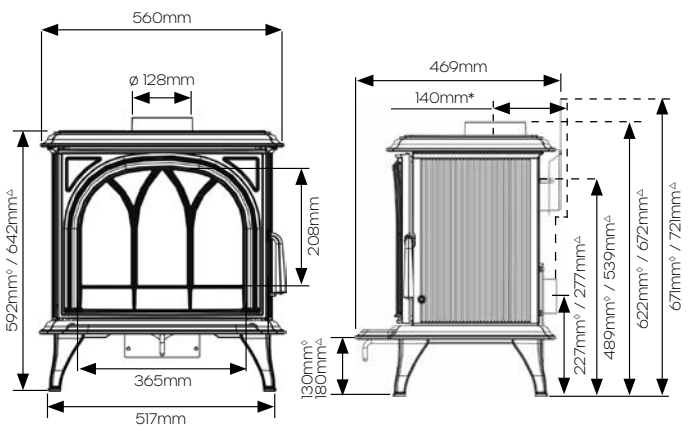

◊ = Standard Model △ = Long Leg Model *From Top Flue Exit

Huntingdon **40** ..... 28 - 33

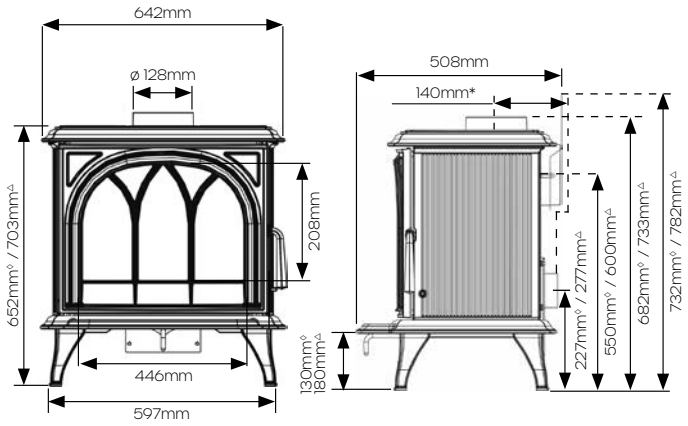

◊ = Standard Model △ = Long Leg Model *From Top Flue Exit

County **3** ..... 34 - 39

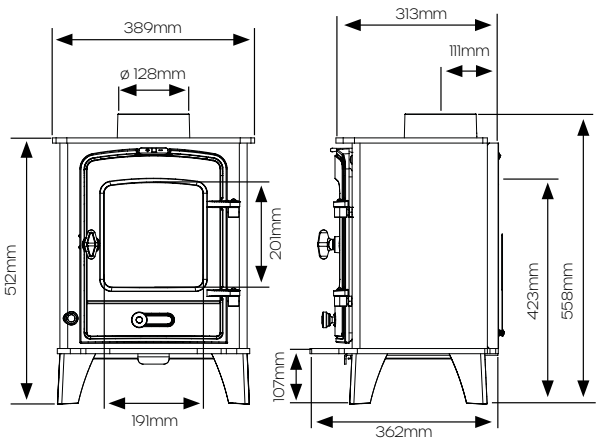

County **5** ..... 34 - 39

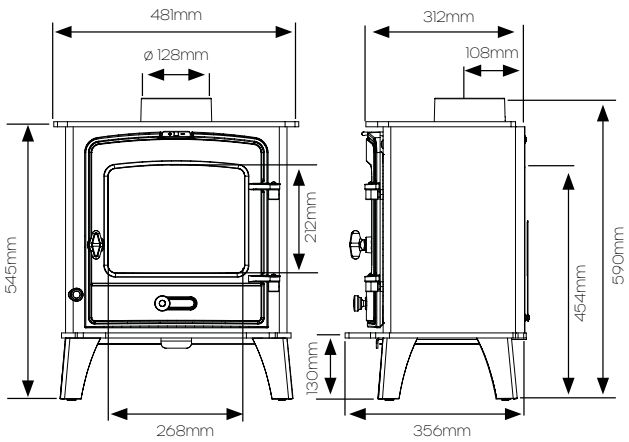

County **5 Wide** ..... 34 - 39

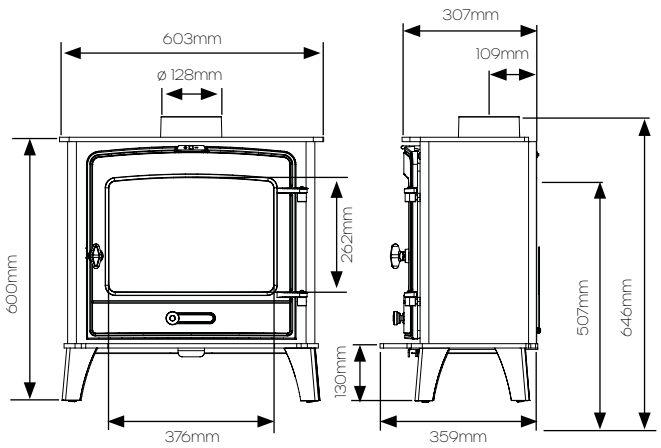

County **8** ..... 34 - 39

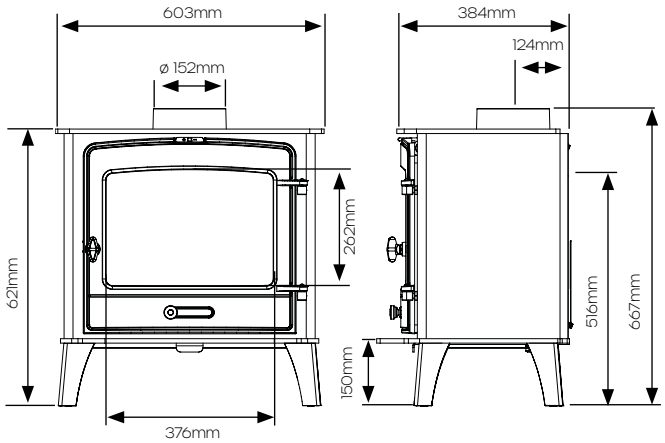

Technical Information

Chesterfield **5** ..... 40 - 45

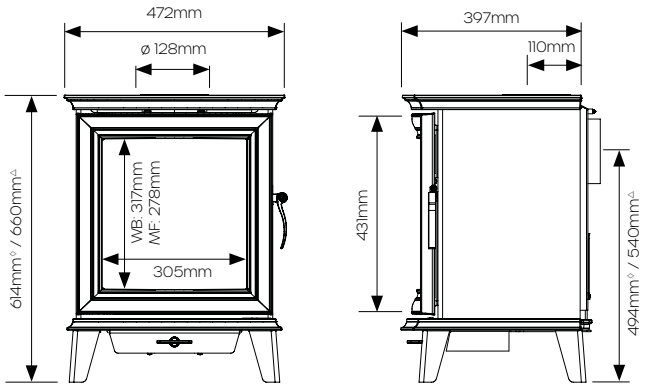

◊ = Standard Model △ = Long Leg Model

Chesterfield **5 Wide** ..... 40 - 45

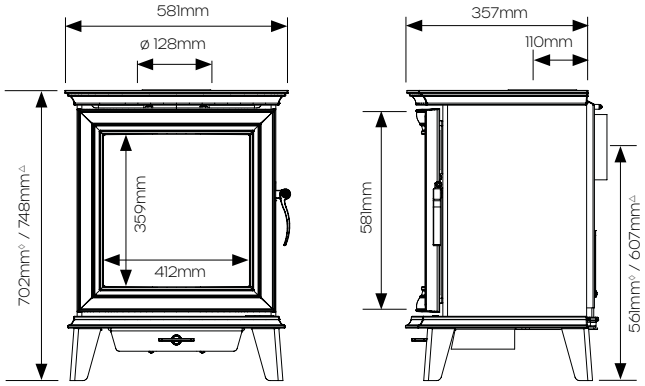

◊ = Standard Model △ = Long Leg Model

Sheraton **5** ..... 46 - 51

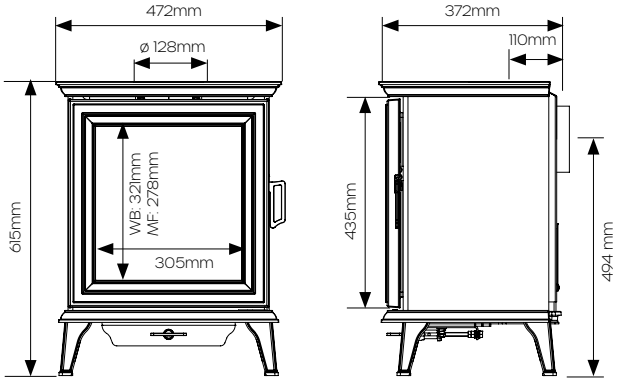

Sheraton **5 Wide** ..... 46 - 51

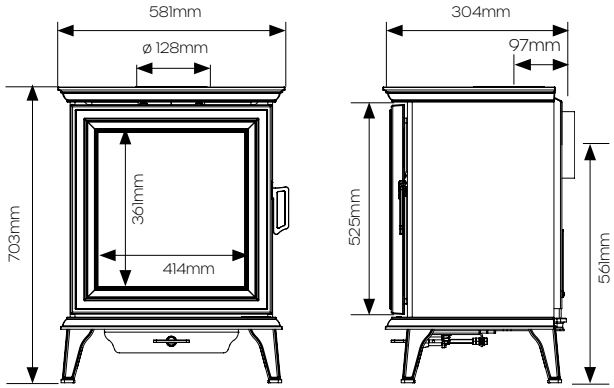

Vogue **Small** ..... 52 - 59

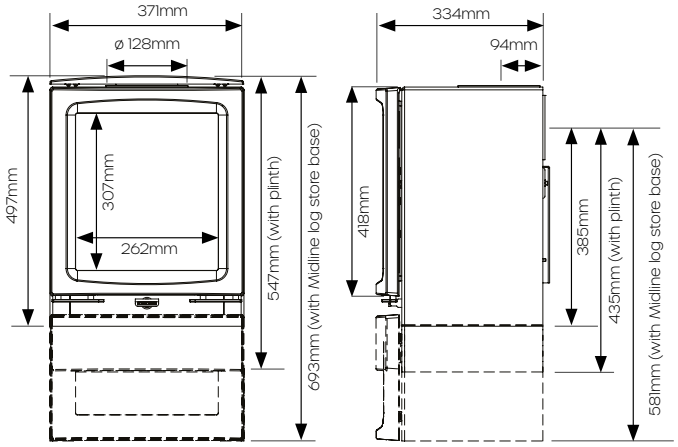

Vogue **Small T** ..... 52 - 59

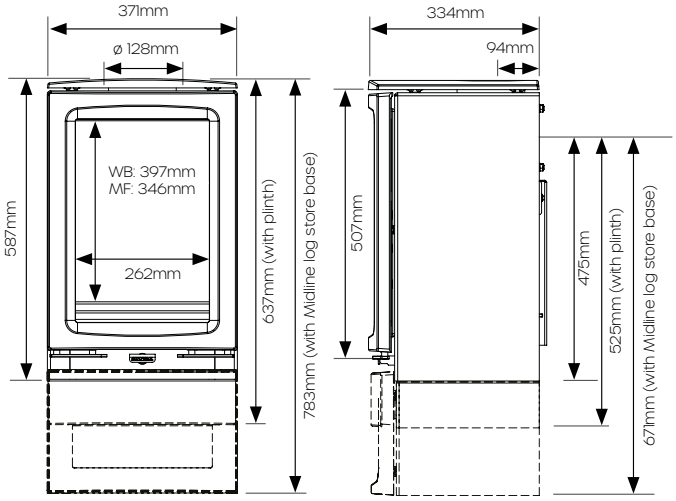

Technical Information

Vogue **Midi T** & **Wall Hung** ..... 52 - 59

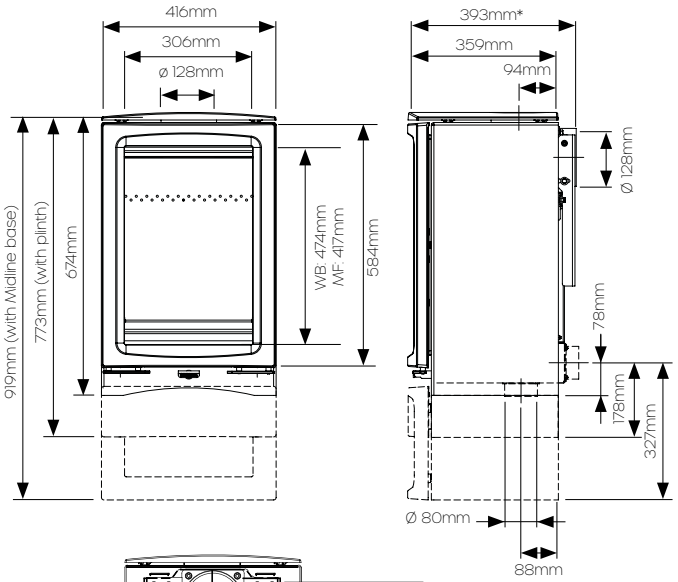

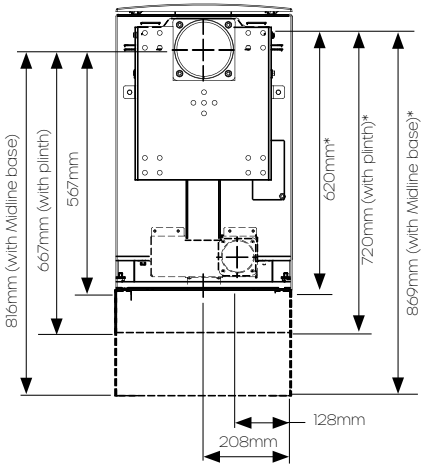

* When fitted with optional Wall Mounting Bracket

Vogue **Midi** ..... 52 - 59

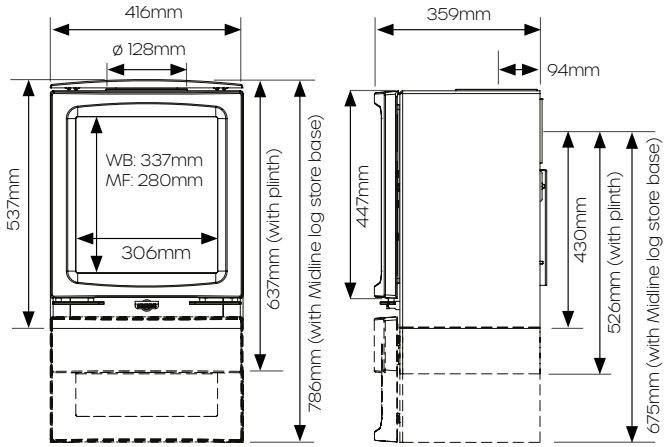

Vogue **Medium Slimline** ..... 52 - 59

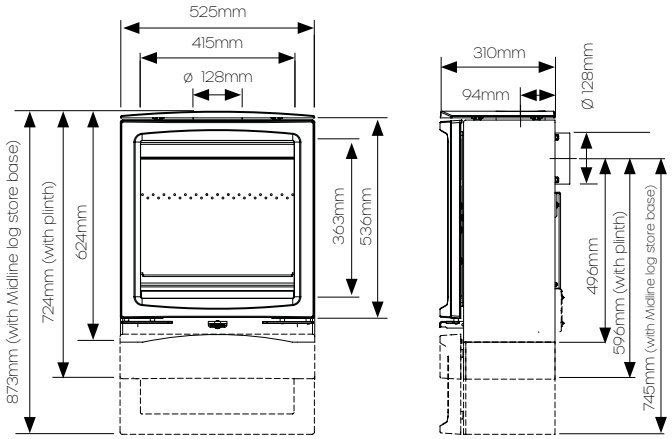

Vogue **Medium** ..... 52 - 59

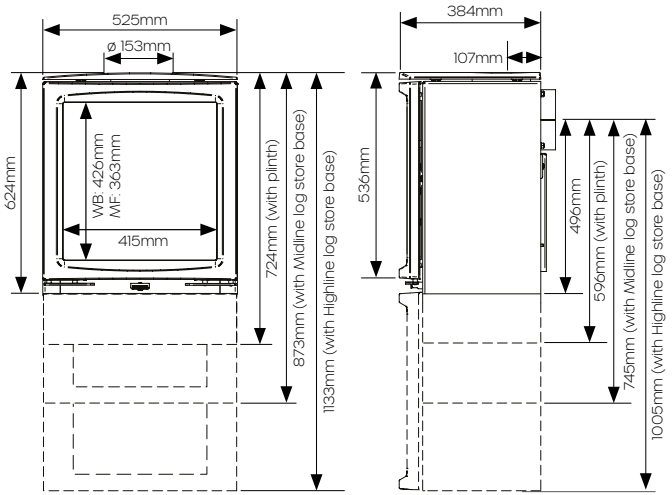

Vogue **700 Inset** 61

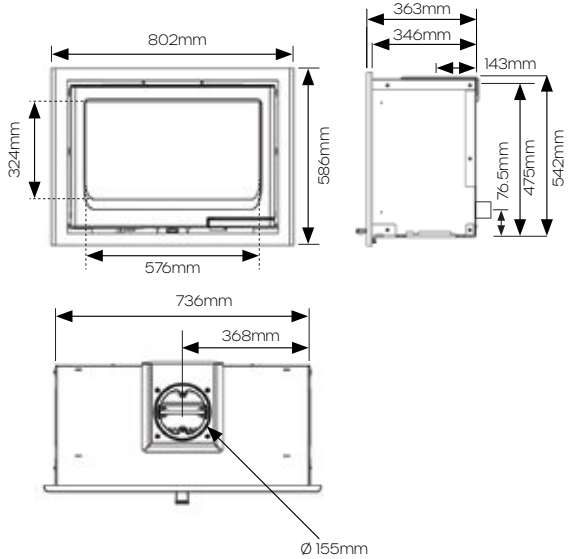

Technical Information

Riva2 **40 Freestanding** ..... 60 - 67

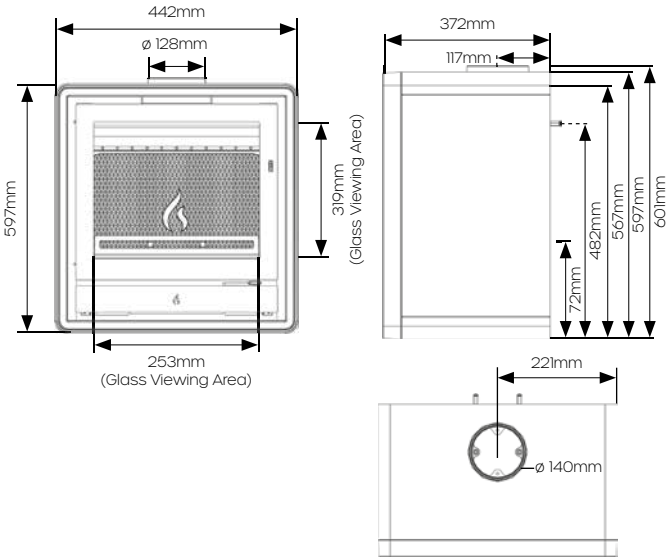

Riva2 **50 Freestanding** ..... 60 - 67

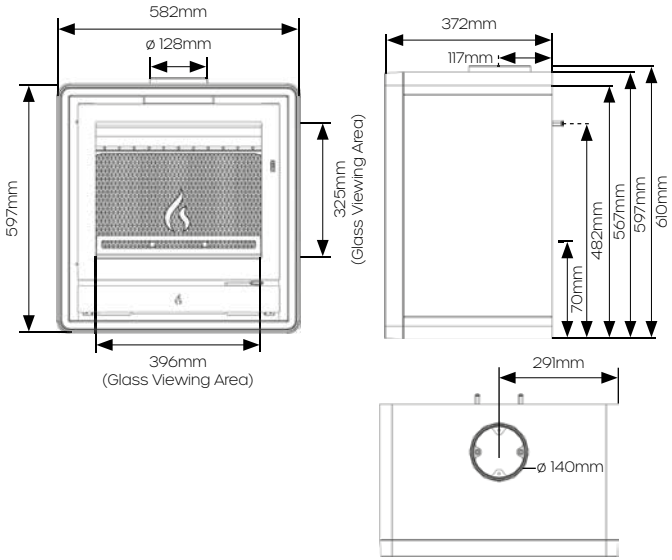

Riva2 **55 Freestanding** ..... 60 - 67

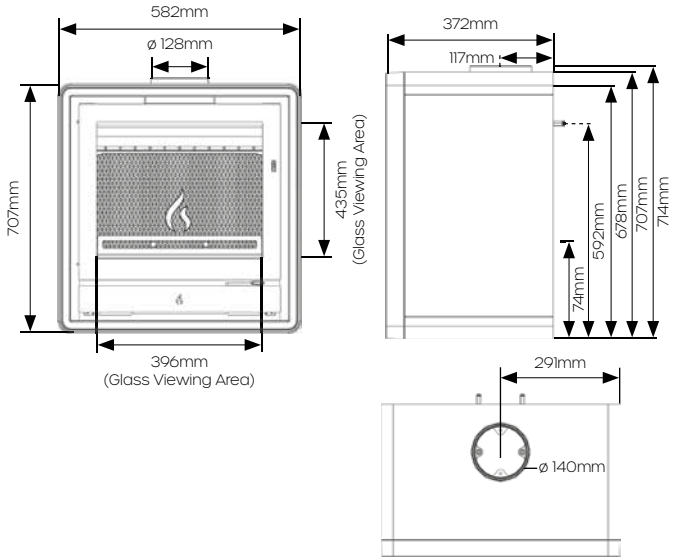

Riva2 **66 Freestanding** ..... 60 - 67

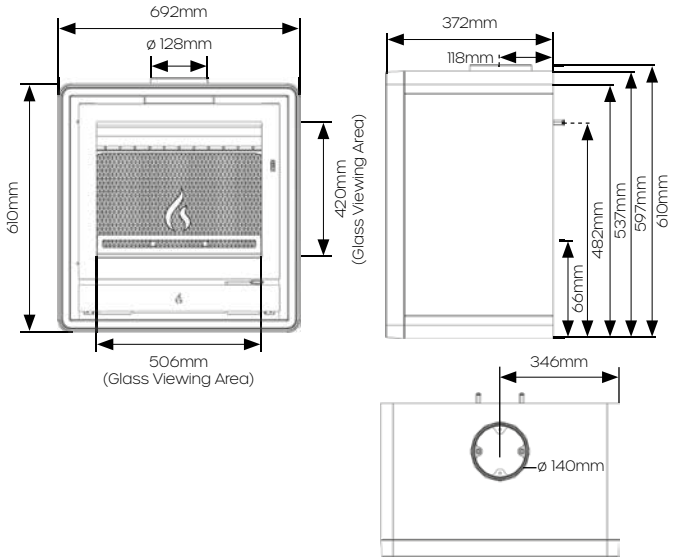

Riva2 **Freestanding Log Box** ..... 60 - 67

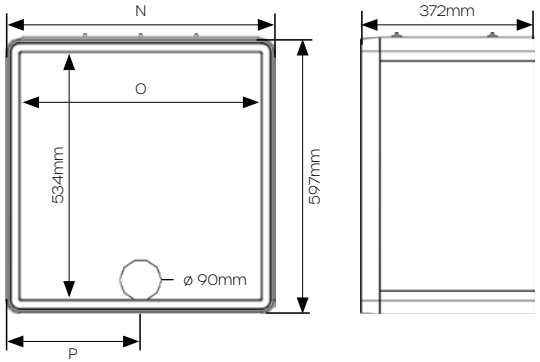

	Riva2 **40**	Riva2 **50**	Riva2 **55**	Riva2 **66**
N	442	582	582	692
O	379	519	519	629
P	221	291	291	346

Riva2 **Freestanding Feet** ..... 60 - 67

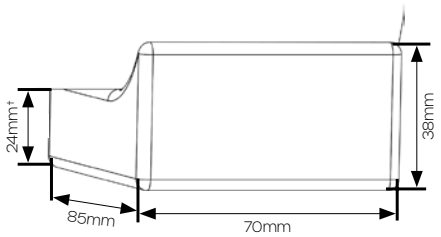

† = Feet increase the overall height by 24mm

Vogue Medium Slimline multi-fuel stove, shown burning logs, ***see pages 52 - 59***

Exceeding **EcoDesign**

Designed with the very latest firebox engineering, our Ecodesign Plus woodburning and multi-fuel appliances represent the cutting-edge of stove design. Their low emission, high efficiency combustion systems ensure that substances present in smoke emissions such as Carbon Monoxide (CO), nitrogen oxides (NOX), Organic Gaseous Compounds (OGC) and particulates (PM) are minimised.

eco ECODESIGN PLUS

Thanks to their eco-focused design, all Ecodesign stoves easily pass Smoke Control Zone requirements making them suitable for installation in urban and rural areas alike.

Total **Efficiency %**

Balancing a stove's efficiency with cleanliness of burning is a precise science, requiring expert engineering and meticulous testing. All our Ecodesign Plus stoves surpass the 2022 Ecodesign Efficiency target of 73%, resulting in a range of truly environmentally designed products

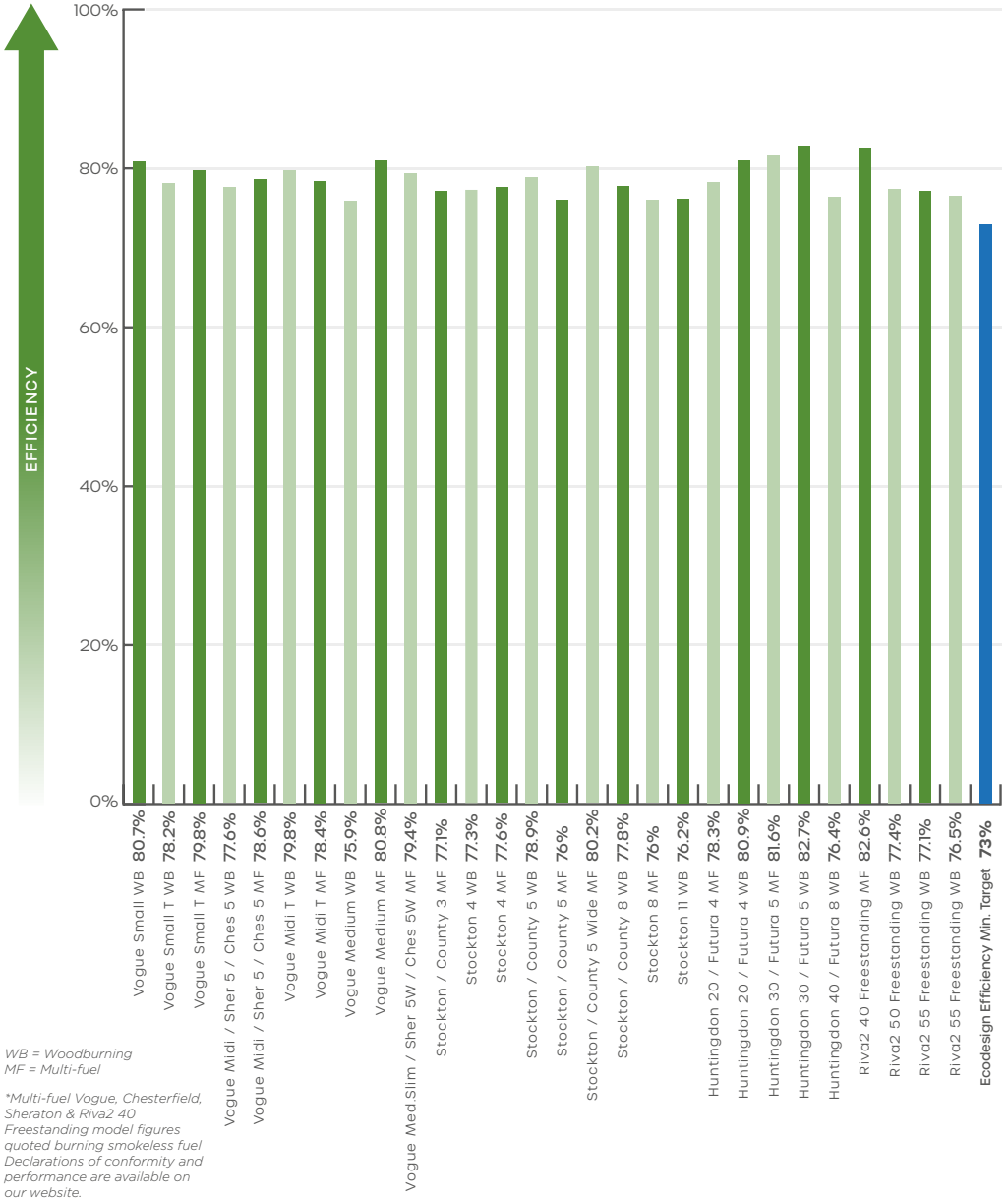

WB = Woodburning
MF = Multi-fuel

**Multi-fuel Vogue, Chesterfield, Sheraton & Riva2 40 Freestanding model figures quoted burning smokeless fuel Declarations of conformity and performance are available on our website.*

PM **(Particulate Matter)** mg/m³

Although PMs are currently measured for UK smokeless zone requirements, Ecodesign emission requirements are much tighter. Our Ecodesign stoves burn well below these tougher PM targets, with some models generating almost two thirds less than the permitted PM emission amount of 40 mg/m³.

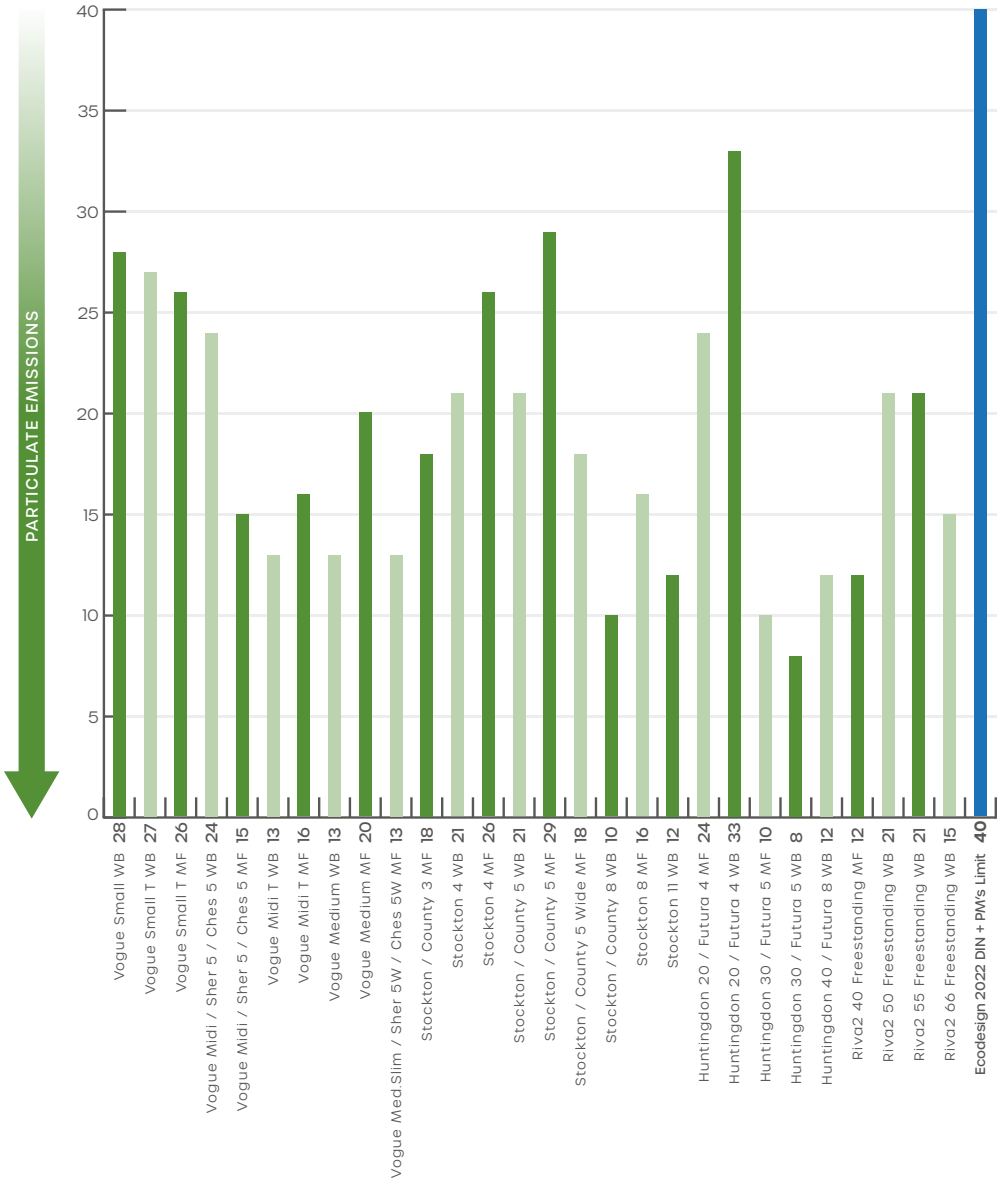

NOx **(Nitrogen Oxides)** mg/m³

Nitrogen oxides affect air quality and are another emission requirement of Ecodesign. All Stovax Ecodesign stoves deonstrate NOx emissions that are well below the permitted amount.

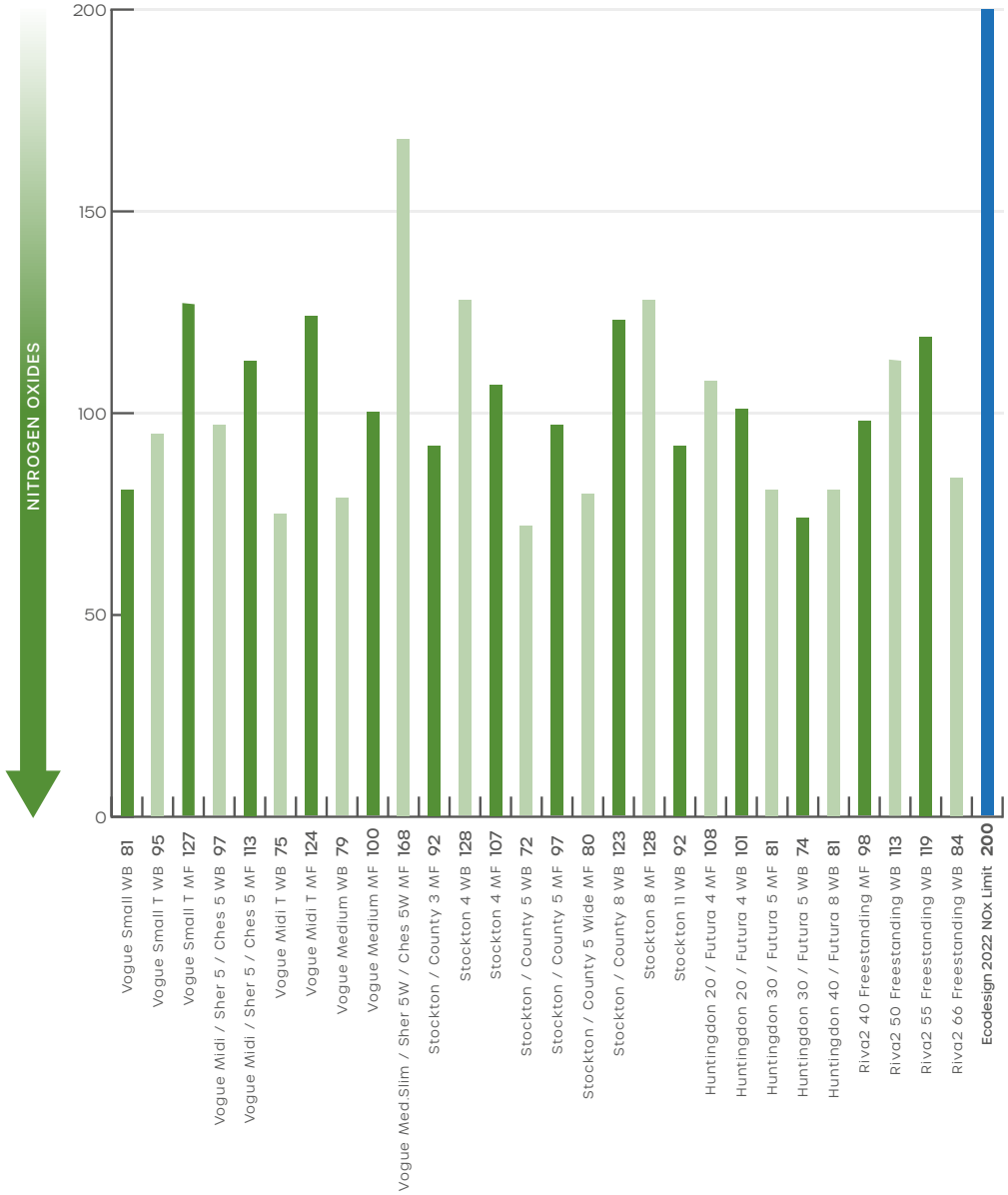

OGCs **(Organic Gaseous Compounds)** mg/m³

Minimising OGCs is also an important requirement of Ecodesign standards. All Stovax Ecodesign stoves fall comfortably below this exacting emission target.

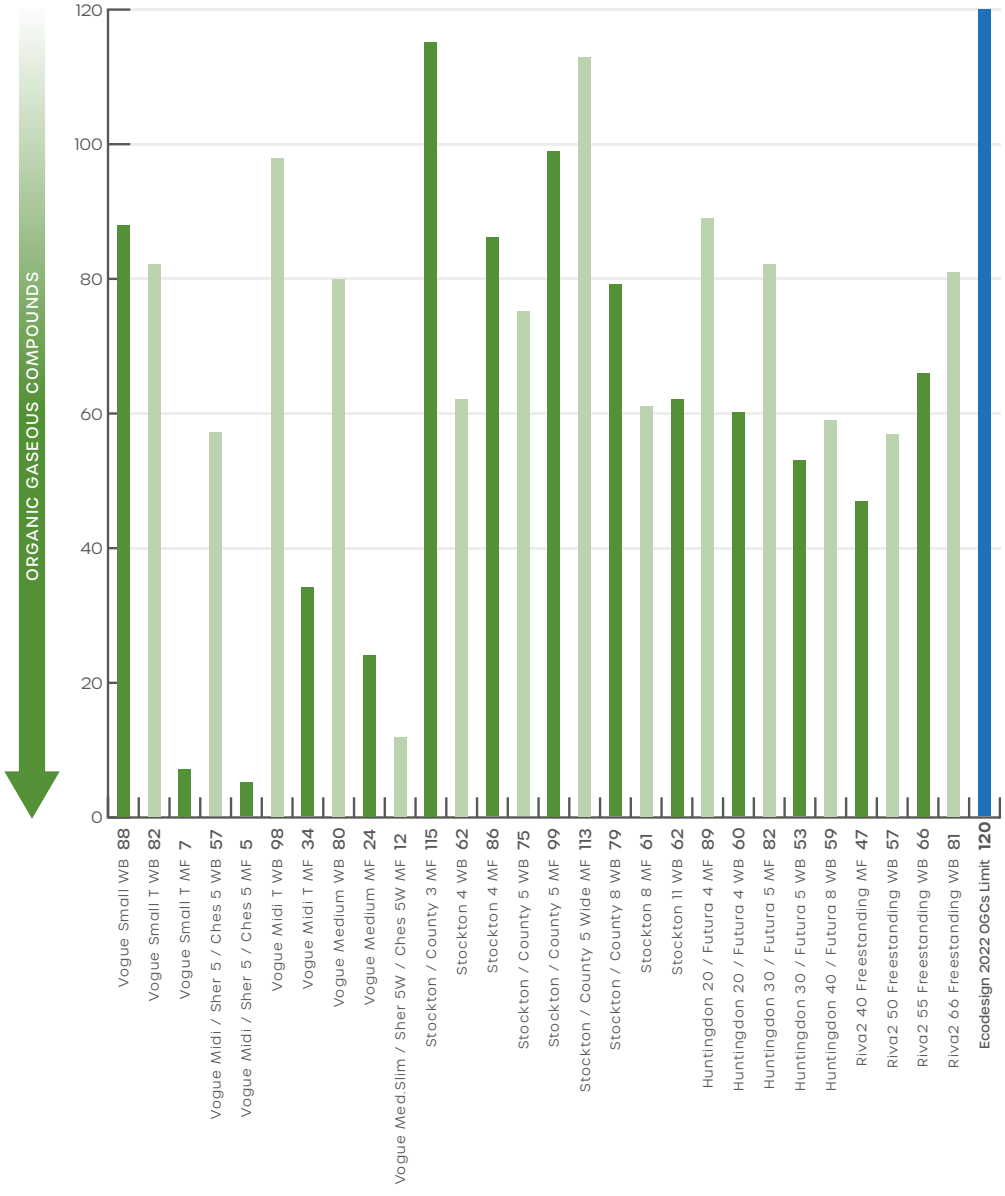

CO **(Carbon Monoxide)** % @ 13% O_2

Ecodesign limits dramatically reduce the current UK Carbon Monoxide emission limits by a massive 88%, from 1% @ 13% O_2 to 0.12%. All Stovax Ecodesign stoves meet this stringent standard.

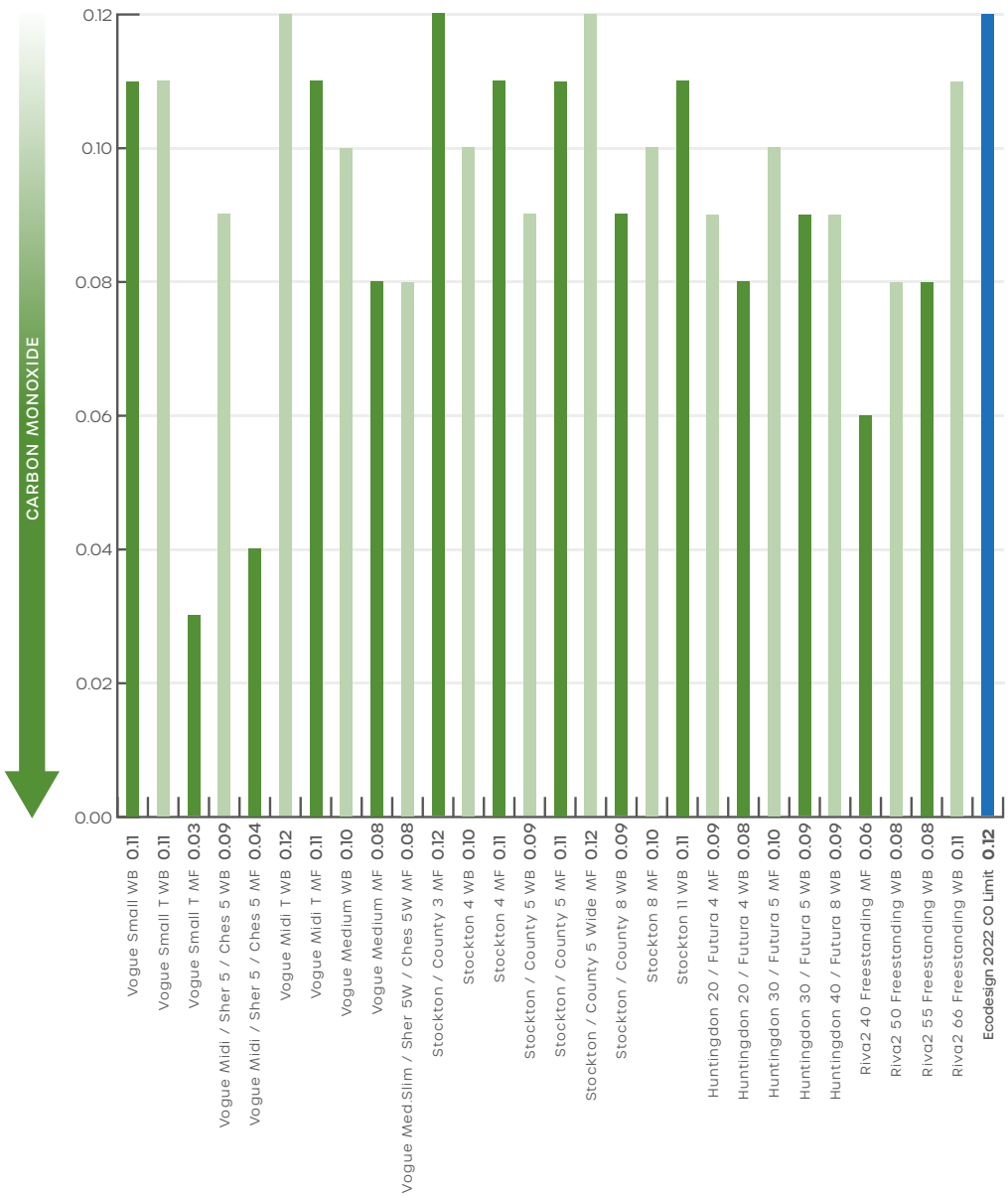

Riva2 50 Freestanding woodburning stove, with removeable handle in situ and optional Log Box , ***see pages 60 - 67***

Further Information

Stovax Heat Shields

Stovax offer a range of highly effective Heat shields for the Vogue stove range. These fantastic additions will allow a reduction in the distance to combustible materials at the rear and sides of the stoves as shown below. The Stovax Heat Shields not only maximise the available space within the room, but they also enable you to accommodate a wider range of materials in your interior design. For more information, please speak to your local Stovax retailer.

Stove	Product Code	Distance from sides	Distance from rear
Vogue Small	VG-SMHSK-E	350mm	100mm
Vogue Small T	VG-SMTHSK-E	350mm	100mm
Vogue Midi	VG-MIDHSK-E	400mm	100mm
Vogue Midi T	VG-MIDTHSK-E	400mm	100mm
Vogue Medium	VG-MEDHSK-E	300mm	50mm
Vogue Medium Slimline	VG-MEDHSK-E	300mm	50mm

Room Ventilation & Direct Air Supply

While every installation is different, some stoves may require ventilation into the room they are installed in, with the size of the vent dependent on the kW output of the appliance. To minimise cold draughts that may be introduced by having a room vent open to the outside, Stovax have developed a range of woodburning stoves and fires which are compatible with a dedicated external air supply.

Designed from conception to be airtight, some of our stoves including Chesterfield, Sheraton & Vogue stoves can be optionally installed with a dedicated external air supply, meaning they do not need to draw any air from the room. This potentially negates the need for an additional air vent, therefore minimising draughts.

Stoves in the Futura and Huntingdon ranges come ready to be installed with an external air supply, without the need for an additional bespoke kit. Thanks to their built-in air connections, all that is needed for these stoves to take combustion air from the outside of your property is to be connected to an external air pipe.

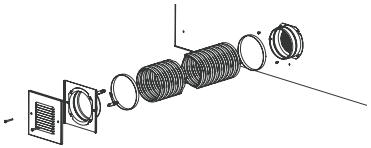

Stoves with Integral Heat Shields

The stoves below come complete with integral heat shields for reduced distances to combustible materials

Stove	Distance from sides	Distance from rear
Sheraton 5	300mm	50mm*
Sheraton 5 Wide	250mm	50mm*
Stockton 3	400mm	150mm*
Stockton 4 Wood	350mm	250mm*
Stockton 4 Multi-Fuel	450mm	300mm*
Stockton 5 Wood	350mm	150mm*
Stockton 5 Multi-Fuel	400mm	150mm*
Stockton 8 Wood	500mm	300mm*
Stockton 8 Multi-Fuel	575mm	450mm*
Stockton 11	500mm	400mm*
Chesterfield 5	300mm	50mm*
Chesterfield 5 Wide	250mm	50mm*
Futura 4 Wood	150mm	75mm*
Futura 4 Multi-Fuel	225mm	150mm*
Futura 5	150mm	75mm*
Futura 8	150mm	100mm*
Huntingdon 20 Wood	175mm	75mm*
Huntingdon 20 Multi-Fuel	200mm	150mm*
Huntingdon 30	200mm	75mm*
Huntingdon 40	175mm	100mm*
County 3	400mm	150mm*
County 5	400mm	150mm*
County 5 Wide	400mm	300mm*
County 8	500mm	300mm*
Riva2 40 Freestanding	250mm	150mm*
Riva2 50 Freestanding	250mm	150mm*
Riva2 55 Freestanding	250mm	150mm*
Riva2 66 Freestanding	250mm	150mm*

** To achieve this clearance a Flue Shield must be used in conjuction with Twin Wall Flue Pipe.*

Further Information

12mm Hearth Compatible Stoves

A large number of Stovax stoves are suitable for installation with just a 12mm hearth, negating the need for a typical constructional hearth and offering a wider range of installation options. See our complete list of 12mm hearth compatible stoves below.

- Chesterfield 5
- Chesterfield 5 Wide
- Sheraton 5
- Sheraton 5 Wide
- Huntingdon 20
- Huntingdon 30
- Stockton 3
- Stockton 4
- Stockton 5
- Stockton 5 Wide
- County 3
- County 5
- County 5 Wide
- Futura 4
- Futura 5
- Vogue Medium Slimline
- Vogue Medium
- Vogue Midi T*
- Vogue Midi
- Vogue Small T*
- Vogue Small
- Riva2 Freestanding Range

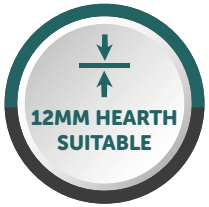

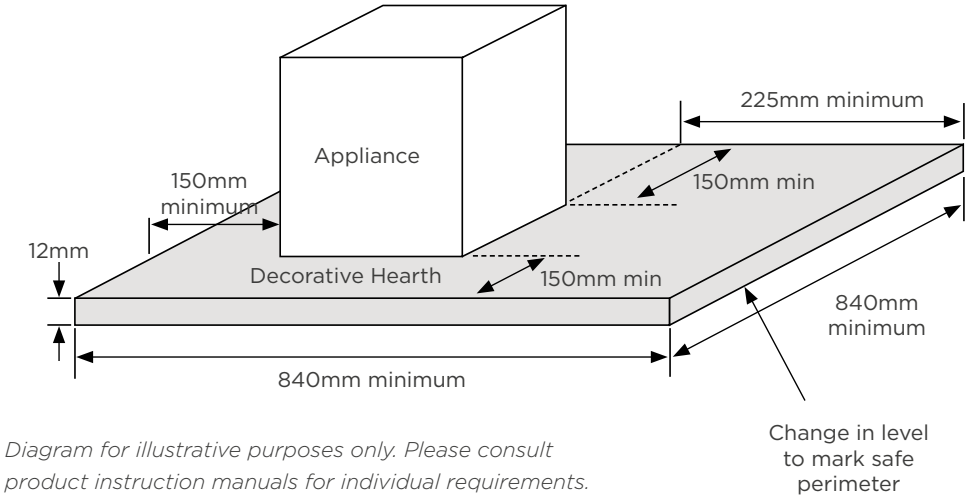

Diagram for illustrative purposes only. Please consult product instruction manuals for individual requirements.

** Woodburning model only.*

Enamelled Flue Pipe

Our range of high quality flue pipes offer further installation options for your stove as well as optimum heating performance. The flue pipe diameters required for each model are shown on individual product pages.

5" Diameter

250mm Straight without door	998-145
500mm Straight without door	998-156
1000mm Straight without door	998-163
500mm Straight with door	998-170
1000mm Straight with door	998-184
510mm to 860mm Telescopic Straight without door	998-196
45° Elbow with door	998-240
45° Elbow without door	998-255
Tee Piece with End Cap	998-261

6" Diameter

250mm Straight without door	998-200
500mm Straight without door	998-207
1000mm Straight without door	998-214
500mm Straight with door	998-222
1000mm Straight with door	998-229
510mm to 860mm Telescopic Straight without door	998-233
45° Elbow with door	998-274
45° Elbow without door	998-295
Tee Piece with End Cap	998-301

Please note: owing to different production processes, we cannot guarantee a perfect match between pipe and stove.

Stove Benches

These versatile steel benches are compatible with Stovax's freestanding contemporary stoves. With a variety of size options, they offer greater design possibilities to accommodate your individual; styling requirements. You can even use the space beneath for log storage![†]

- Sturdy Steel construction
- Choice of sizes available
- Durable Matt Black finish
- Proportioned 60mm wide legs
- Allows for central or offset stove positioning

Product Code	Product	W (mm)	H (mm)	D (mm)
RVACLB45BHT	Bench 45 Low*	450	250	420
RVACB45BHT	Bench 45 High*	450	350	420
RVACB81BHT	Bench 81 High	809	350	420
RVACLB100BHT	Bench 100 Low	1000	250	420
RVACB100BHT	Bench 100 High	1000	350	420
RVACLB120BHT	Bench 120 Low	1200	250	420
RVACB120BHT	Bench 120 High	1200	350	420
RVACLB140BHT	Bench 140 Low	1400	250	420
RVACB140BHT	Bench 140 High	1400	350	420
RVACLB180BHT	Bench 180 Low	1800	250	465
RVACB180BHT	Bench 180 High	1800	350	465

† When storing logs under stove benches Stovax advise this should be offset to one side and not directly beneath the stove's position. If placing beneath the stove there should be a minimum 50mm air gap above logs.

** Suitable for Vogue Small, Small T, Midi, Midi T & Riva2 40 Freestanding.*

Professional XQ™ Chimney Systems

10 YEAR EXTENDED WARRANTY

For homes **without a chimney!**

Stovax also offers a comprehensive range of stove & fireplace chimney systems, the Stovax Professional XQ™ collection. Crafted from high grade stainless steel for a durable outer finish, the fully sealed components offer water tight protection for the insulation within.

With innovative decorative options, the ability to specify a colour for your system and with a host of technical advancements such as their Twist-Lock system, the Professional XQ™ range provides an attractive versatile and reliable solution for your flue system. Furthermore, the Professional XQ™ range carries a 10 year conditional warranty offering complete peace of mind.

For further information visit
stovax.com/chimneysystems

Stovax Companion Log Holders

Enhance your hearth with Stovax's Black Steel Log Holders - where sleek design meets practical functionality. Available in a selection of sizes, these holders provide a stylish solution for neatly storing your firewood. Crafted from durable steel with a Matt Black finish, they not only offer longevity but also add a touch of sophistication to both traditional and contemporary interiors. Each holder is designed to maximise storage capacity whole maintaining a compact footprint, making them ideal for various room sizes and layouts.

County 5 Woodburning Stove, *see pages 34 - 39*

WIN

THE COST OF YOUR PRODUCT BACK!*

For further home inspiration you can view real life installations at our Customer Showcase page and share your thoughts and photos of your new stove or fire installation to enter our draw!

- We will publish your entry on our Customer Showcase
- You will be entered into a draw for the chance to win the cost of your product back.
- **Gain a second entry** by registering your product online for your free extended warranty at **stovax.com/registration**

PREVIOUS WINNER!

"Really happy with the stove. I still can't believe it!"

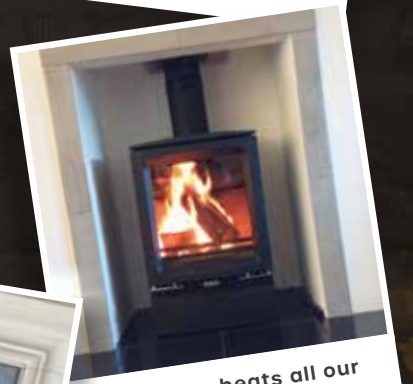

"Amazing, beats all our expectations"

"It looks fantastic!"

View real life installations and submit your review at:

stovax.com/customershowcase

**Terms and conditions apply. See online for details.*

Accessories, Stove Care and Important Information

Care of your Stove

To help you get the best performance from your stove and keep it in good condition, inside and out, Stovax offers a wide range of cleaning and maintenance products. Your Stovax retailer will be able to give you full details or you may view the complete range at **www.stovax.com**.

Stockton 3 Multi-fuel Stove, shown burning logs, ***see page 20 - 27***

Important Safety & Technical Information

We recommend that an approved competent person of solid fuel installations should undertake a site survey prior to purchase and it is a requirement that any Stovax Stove should be installed by an appropriately qualified approved installer.

All fires and stoves consume air as they burn. To comply with Building Regulations you may need to install a fixed air vent to ensure adequate ventilation. Your Stovax retailer or approved competent person of solid fuel installations will be able to advise on this. Furthermore, by law all installations also require a Carbon Monoxide monitor (such as product code 3045 available from Stovax). You can also download detailed installation instructions prior to purchase from **www.stovax.com**.

Please note that all parts of these stoves, particularly the glass panel in the door, become extremely hot during operation and can result in serious injury and burns if touched. It is therefore recommended that a fireguard complying with the current version of BS 8423 is used in the presence of young children, the elderly or infirm.

Brochure Photography

All of the flame pictures shown in this brochure are taken from real fires. Please note however, that flame pictures will vary depending on the exact fuel used, flue conditions and surrounding geographical features. Given that building regulations are subject to change, some of the photography in this brochure may not comply with the requirements of the latest Building Regulations. You should always check your proposed installation arrangement with your approved competent person of solid fuel installations before proceeding and observe the minimum distance to combustible materials as stated in the installation instructions. Some of the installations in this brochure are dependent on the use of heat shields to reduce required separation from combustible material.

Huntingdon 40 Woodburning Stove, with Tracery Door & Long Legs, ***see pages 28 - 33***

Product Improvement & Warranty Information

Stovax pursure a policy of constant product improvement. Products supplied may therefore differ in specification from those illustrated or described in this brochure, and you should always check the final specification with your Stovax retailer.

When you choose a Stovax stove or fire, quality and technology are assured. Accordingly, when you purchase your new stove or fire from a Stovax Expert Retailer they will provide you with a Two Year Warranty.
This can then be extended to a Ten Year warranty provided your stove or fire is registered with Stovax.

When you register your fire, you will also be automatically entered into a prize draw where you can win back the cost of your product. Further details of this warranty and terms & conditions are available to view on **stovax.com**.

10 YEAR EXTENDED WARRANTY

Stockton 5 Wide Fixed Grate Woodburning and Multi-fuel Stove, shown with single door, ***see pages 20 - 27***

Sign up to our **newsletter!**

Sign up to our newsletter to get the latest on product releases, exclusive promotions, exciting giveaways and competitions, plus news updates!

stovax.com/signup

Futura 5 Highline Woodburning Stove, ***see pages 14 - 19***

Onyx

ATHOS & OLYMPUS

WOOD & MULTI-FUEL STOVES

Representing the summit of style and performance, the Athos and Olympus stoves unite the timeless allure of real fire with the very latest in design and precision engineering.

Part of **Onyx**, the sister brand of **Stovax**, this distinguished collection of woodburning and multi-fuel stoves embodies the perfect balance of elegance, power and long-lasting quality — crafted to elevate the warmth and character of your home.

Discover the full range at **onyxfires.com.**

Onyx Olympus 5 Wide Woodburning Stove

Build It AWARDS 2025 WINNER Best Stove Product

Onyx Athos 5 Woodburning Stove, shown with ceramic wood-effect beam

Watch them burning at:
onyxfires.com/athos-olympus

GAZCO · onyx

Have you considered **gas and electric?**

Many of the stoves in this brochure are also available in gas and electric versions. Offering all the ambience of a woodburning model, these innovative stoves provide superb flame visuals at the touch of a button.

Our gas and electric division, Gazco along with our sister brand Onyx, design and build stoves that look and feel every bit as solid and authentic as our solid fuel stoves. This is because they are built with the same high quality materials and craftsmanship.

On the inside, cutting-edge technologies allow these advanced stoves to create captivating flame visuals, complemented by hand-painted fuel effects for breath-taking realism. And with various handset options, each model can be easily controlled from the comfort of the sofa.

For more details ask your local retailer or visit **www.gazco.com** to view the complete range.

Gas Vogue Midi T Midline

Onyx Liv3 Gas Stove

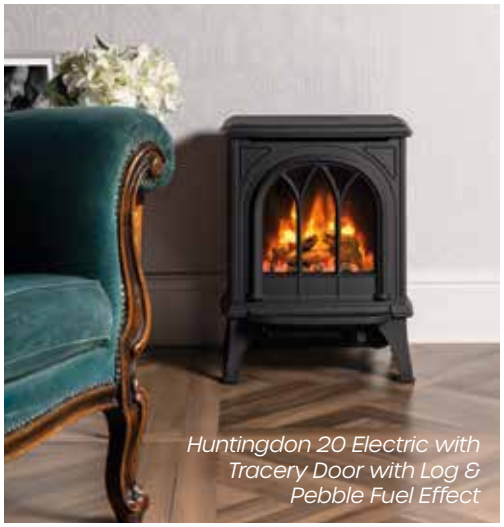
Huntingdon 20 Electric with Tracery Door with Log & Pebble Fuel Effect

Gazco Chesterfield 5 Gas with Grey Pembroke Mantel

STOVAX

Stovax Gazco Ltd Spitfire Avenue, Skypark,
Clyst Honiton, Exeter, EX5 2FR

Trade Sales: 01392 474000 • info@stovax.com

stovax.com

Find your retailer

You can find your nearest retailer by visiting: stovax.com/retailers

Sign up to our newsletter

Sign up to our newsletter to get the latest news: stovax.com/signup

Your Stovax Retailer:

STOV0326

Stovax gratefully acknowledges the assistance of the following companies with photographic settings:

www.johnlewis.com; www.originalstyle.com; www.debenhams.co.uk; www.furniturevillage.com; www.habitat.co.uk; www.amtico.com; www.andrewmartin.co.uk; www.sofarooms.co.uk; www.nkuku.com; www.tomraffield.com; www.industville.co.uk; www.graceandgloryhome.co.uk; www.loaf.com; www.bricktilecompany.com; www.houseoffraser.co.uk; www.theorangetree.co.uk; www.mokodirect.com; www.amoslighting.co.uk; www.opiesuk.co.uk; www.oliverbonas.com; www.desenio.com; www.chunkymonkeyfurniture.co.uk; www.wallsandfloors.com; www.3dwallpanels.co.uk; www.stoneandsurfaces.co.uk; www.wallsandfloors.co.uk

© All material copyright Stovax Ltd 2026 • E & O E • Paper sourced from sustainable forests and printed using vegetable-based inks